Intelligent
Dimmable LED Driver

CV & CC **8W-720W**



• Triac/ Phase-cut • 0/1-10V • DALI-2 & Push-Dim • DMX512 • Wireless BLE/ ZigBee/ Wi-Fi • Non-Dimmable •

MARTOYO APPLIED MATERIALS CO., LTD

Address：626/2 , Group 2, Chau Thoi, Binh An Ward, Di An Town, Binh Duong

Hotline: 1900 0316

Website: www.scpower.vn

Email: info@scpower.vn

SC POWER

Professional manufacturer of dimmable LED driver

About SC POWER



PROFESSIONAL MANUFACTURER OF INTELLIGENT DIMMABLE LED DRIVER

Founded in 2009, we specializes in R&D and manufacturing intelligent dimmable LED driver, non-dimmable LED driver and LED controller based on science and technology in its early days. After years of striving, SCpower has formed competitive strength in the field of intelligent dimmable LED driver and become a leader in China by offering LED driver with the widest range of wattage & full-lined series, the most models, and the most authoritative certificates in this aspect of mainstream dimmable LED driver, which includes TRIAC/Phase-cut dimming, 0/1-10V dimming, DALI dimming, Push dimming, DMX512 dimming, ZigBee/ Bluetooth/ Wi-Fi wireless dimming,etc.

SC's intelligent dimmable and non-dimmable LED drivers have been recognized by the market. Moreover, quite a few projects for government or bussiness, have adopted SC LED driver as reliable products, such as Marina Bay Sands at Singapore and Four Seasons Hotel at Amman Jordan,etc..Beijing YanQi Lake APEC/G20 Villa, Shanghai International Convention Center (the banquet of CICA Summit), Shanghai Sheraton Hotel, Changsha Wanda Plaza and Shunde Marriott Hotel, Marina Bay Sands at Singapore, Union Square in Vietnam, Merryland Quy Nhon in Vietnam and Four Seasons Hotel at Amman Jordan,etc..

With its stable quality, smooth log./linear dimming, high compatibility and other advantages, SCpower's dimmable drivers have been well received by customers in all over the world. Nowadays, with UL, cUL, ETL, cETL, FCC, ENEC, TUV-CE, CB, SAA, CCC, DALI-2, RoHS, ISO 9001 and other certificates, SCpower's products have been exported to numerous oversea markets such as North America, Europe, Australia, Southeast Asia, South America and so on...

Advanced manufacturing equipments, including JUKI-Hi-speed mountings, Suneast wave solderings, AOI test device and others, promise the high capacity up to 300,000 pieces products per month.

We sincerely look forward to cooperating with friends from all over the world and achieve a win-win situation!










Development History of SC POWER's dimmable products

2009-2015

Triac/Phase-cut
CV&CC 20W-80W

0-10V/1-10V
CV&CC 20W-200W

DALI
CV&CC 20W-200W

ZigBee wireless
CV & CC 20W-45W

DALI& Push 2 in 1
CV & CC 25W-200W

2016

Triac/Phase-cut
CV 8W-200W
With PWM output

0/1-10V
CV 300W-360W

DALI& Push 2 in 1
CV 300W-360W

2017

Triac/Phase-cut
KVF series
CV 30W-360W
With high PF

Triac& 0/1-10V 5 in 1
KVG series
CV 30W-360W
With high PF

Triac LED controller
0-10V LED controller
DALI LED controller

2018

Triac/Phase-cut
High PF KVF series
CV 384W
Din Rail 60W-100W

Triac& 0/1-10V 5 in 1
High PF KVG series
CV 384W
Din Rail 60W-100W

0/1-10V 4 in 1
High PF KVD series
CV 30W-384W
Din Rail 60W-100W

2019

DMX512
CV 30W-300W
CC 10W-60W

Wireless
(BLE/ ZigBee/Wi-Fi)
CV 60W-200W

DALI& Push 2 in1
(DALI-2)
CV 30W-300W

2020

Triac/Phase-cut
CC DIP Adjustment
10W-60W

Triac& 0/1-10V 5 in 1
CC DIP Adjustment
10W-60W

0/1-10V
CC DIP Adjustment
10W-60W

DALI& Push 2 in1
(DALI-2)
CC DIP Adjustment
10W-60W

2021

DALI& Push 2 in1
DT6 (DALI-2)
CC NFC Adjustment
100W

DT8 (DALI-2)
CV 30W-600W
CC DIP Adjustment
20W-60W

2022

DALI-2 DT8
CV NFC Adjustment
80W-600W

DALI-2 D4i
CC NFC Adjustment
30W-720W

Triac/Phase-cut
High PF KVF series
CV 600W

Triac& 0/1-10V 5 in 1
High PF KVG series
CV 600W

0/1-10V 4 in 1
High PF KVD series
CV 600W
High PF KV-PDIM series
CV 96W-300W



Certificates



TUV MARK



ENEC

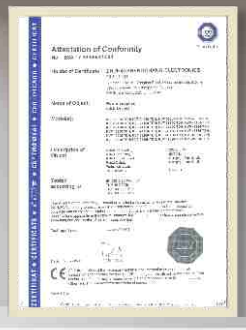

TUV-CE



TUV-CB



Invention patent

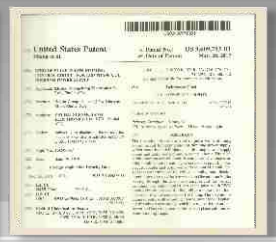

United States Patent



Software Copyrights



Utility and Design Patents



UL/cUL Listed



ETL/CBTL Listed



FCC



SAA



CCC



ICES



RoHS



ISO 9001

Factory Pictures

















LED drivers project



◂ —— Shanghai W Hotel ——




—— Shunde Marriott Hotel —— ▸







◂ —— Shanghai International Convention Center ——
(Banquest Hall of CICA Summit)




—— Beijing Yanqi Lake APEC / G20 Villa —— ▸





LED drivers project



◂ —— Shanghai Jiading Sheraton Hotel ——





—— Changsha Wanda Plaza —— ▸









◂ —— Crowne Plaza Sanya Haitang Bay Resort ——





—— Sanya Beauty Crown —— ▸







LED drivers project



◂ —— Shanghai Sincere Centre ——





—— THE ICON - Shenzhen —— ▸









◂ —— Funiu Shanju Spring Resort Hotel ——





—— Argylehotels (Nanping) —— ▸







Contents

Triac/ Phase-cut

CV KVF series — High power factor, PWM output 04

CV KVP series — PWM output 07

CC KIF series — DIP/NFC Adjustment 08

Triac/0-10V/1-10V/10V PWM/Potentiometer (5 in 1)

CV KVG series — High power factor, PWM output 15

CC KIG series — DIP/NFC Adjustment 17

0-10V/1-10V/Potentiometer/10V PWM (4 in 1)

CV KVD series — High power factor, PWM output 24

CV KV-DIM series 26

CV KV-PDIM series — 0/1-10V & Push-Dim (2 in 1) 29

CC KID series — DIP/NFC Adjustment 30

DALI & Push-Dim (2 in 1) NFC

CV KV-DP2 **DT6** series 37

CC KI-DP2 **DT6** series — DIP/NFC Adjustment 41

CV KV-DP2 **DT8** series 48

CC KI-DP2 **DT8** series — DIP Adjustment 50

CV KV-C-DA2 **DT8** series — Dimming & CCT & RGBCW 52

CC KI-DA2 **D4i** series — NFC Adjustment 53

DALI Relay 63

DALI & 0-10V & Push (3 in 1) decoder 63

DMX512 NFC

Water proof. Set address by RDM/NFC

CV KVX series — Dimming & CCT & RGBCW 67

CC KIX series — DIP/NFC Adjustment — Dimming & CCT 69

Wireless (BLE / ZigBee / Wi-Fi)

CV KVB series — BLE 75

CV KVZ series — ZigBee 76

CV KVW series — Wi-Fi 77

CV KVWB series — Wi-Fi & BLE 78

Non-dimmable

CV KV-AS series — High power factor 81

LED Controller series

LED Triac dimmer 85

LED 0-10V dimmer 86

LED DALI dimmer 87

Triac dimmable LED driver

Differences Between KVG, KVF, KVP Series

	KVG series	KVF series	KVP series
Input Voltage(AC)	200-240V	200-240V	180-240V
Output Voltage(DC)	12V/24V/36V/48V	12V/24V/36V/48V	12V/24V
Wattage Range	30W-600W	30W-600W	8W-200W
Compatibility	leading & trailing edge triac dimmer + 0/1-10V Dimmer	leading & trailing edge triac dimmer	leading edge triac dimmer
Power Factor	>0.95	>0.95	>0.6
Mini.Load	10%	10%	5%
Warranty	5 years	5 years	3 years
Certificate	TUV-CE, TUV Mark, CB, ENEC,SAA,CE, RoHS	TUV-CE, TUV Mark, CB, SAA,RoHS	CE, RoHS

PART 1

Triac/ Phase-Cut Dimmable LED Driver Series

(Leading edge & Trailing edge dimming)

(For LED strip, light bar, LED module, panel light, down light and other LED light)




8W-15W


10W-60W


25W-60W


30W-90W


30W-150W


30W-150W


60W-600W

Wiring diagram

Diagram 1

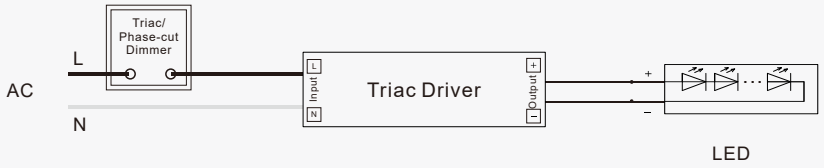

Diagram 2

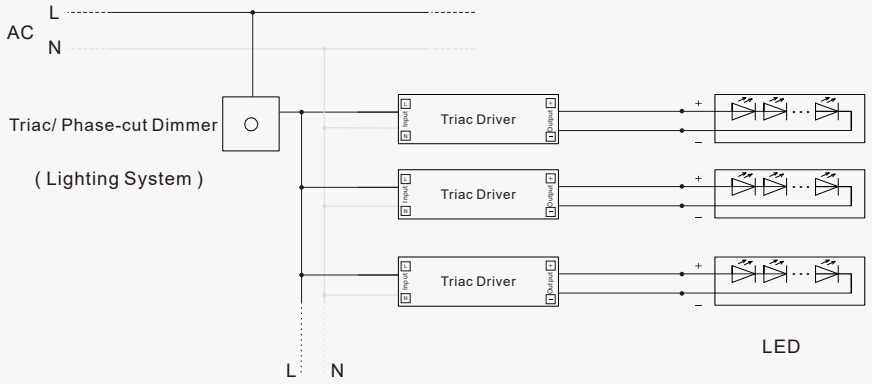

Shengchang Triac/ phase-cut dimmable driver, constant voltage and constant current series, are compatible with mainstream brand dimmers and lighting systems which is leading edge & trailing edge (forward phase, reverse phase, ELV, triac or MLV) in the market, such as Lutron, Clipsal, Scheneider,Philips,Berker, Leviton dimmer or other lighting system.

Triac Dimmer (Page 69)


TDP-250-T1


TDP-250-T2


TDR-300-T1
TDR-300-T2

KVF Series

Triac/ Phase-cut Dimming - Constant Votage

PF≥0.95 Loading: 10-100% Dimming: 0.1-100% 5 years warranty

Overview

SC Power's PWM output KVF Series of Constant Voltage triac dimming LED driver with TUV mark, TUV-CE, CB, SAA, RoHS, ENEC, is designed to work with Leading & trailing edge TRIAC dimmers or lighting system, such as Lutron, C-BUS, Clipsal etc.

Outstanding Performance

- PWM output, Not alter LED CRI
- High power factor, PF≥0.95
- Leading edge, trailing edge, MLV, ELV
- 5 years warranty
- Continuous & Smooth & Stable
- Full Dimming range: 0.1-100%
- 10% minimum load
- Flicker-free

Three different versions

KVF-xxxxx-TDH



30W-90W items:
Low-profile plastic shell with terminals with slightly adjustable output voltage

80W-600W items:
Compact aluminum shell for waterproof use

KVF-xxxxx-TDHS



30W-150W items:
Linear plastic shell with terminals (IP 20)

KVF-xxxxx-TDHL



30W-150W items:
Linear aluminum shell for waterproof use(IP 66)

Perfect for LED fixtures

Perfect to use for LED tape/strip, modules, LED bar light, cabinet light, kitchen light and other LED fixtures.







KVF Series

Triac/ Phase-cut Dimming

Constant Votage PF≥0.95 Loading: 10-100% Dimming: 0.1-100% 5 years warranty Dimming

Power & Picture	Model	Output	Input	Certificate	Size	N.W	IP
30W 	KVF-12030-TDH	12V, 2.5A	200-240 VAC	ENEC、CE、CB、CCC、RoHS、REACH	155*54*20mm	0.21kg	IP20 with terminals
	KVF-24030-TDH	24V, 1.25A					
	KVF-36030-TDH	36V, 0.83A					
	KVF-48030-TDH	48V, 0.63A					
	KVF-12030-TDHS	12V, 2.5A		ENEC、CE、CB、RoHS、SAA、REACH	260*30*18.5mm	0.2kg	IP20 with terminals
	KVF-24030-TDHS	24V, 1.25A					
	KVF-12030-TDHL	12V, 2.5A		ENEC、CE、CB、RoHS、REACH	260*32*20mm	0.35kg	IP66
	KVF-24030-TDHL	24V, 1.25A					
36W 	KVF-12036-TDHS	12V, 3A	200-240 VAC	ENEC、CE、CB、RoHS、SAA、REACH	260*30*18.5mm	0.2kg	IP20 with terminals
	KVF-24036-TDHS	24V, 1.5A					
	KVF-12036-TDHL	12V, 3A		ENEC、CE、CB、RoHS、REACH	260*32*20mm	0.35kg	IP66
	KVF-24036-TDHL	24V, 1.5A					
60W 	KVF-12060-TDH	12V, 5A	200-240 VAC	ENEC、CE、CB、CCC、RoHS、REACH	178*61*24mm	0.35kg	IP20 with terminals
	KVF-24060-TDH	24V, 2.5A					
	KVF-36060-TDH	36V, 1.67A					
	KVF-48060-TDH	48V, 1.25A					
	KVF-12060-TDHS	12V, 5A		ENEC、CE、CB、RoHS、SAA、REACH	300*30*18.5mm	0.25kg	IP20 with terminals
	KVF-24060-TDHS	24V, 2.5A					
	KVF-12060-TDHL	12V, 5A		ENEC、CE、CB、RoHS、SAA、REACH	300*32*20mm	0.45kg	IP66
	KVF-24060-TDHL	24V, 2.5A					
75W 	KVF-12075-TDH	12V, 6.25A	200-240 VAC	ENEC、CE、CB、RoHS、REACH	180*60*35mm	0.45kg	IP20 with terminals
	KVF-24075-TDH	24V, 3.13A					
90W 	KVF-12090-TDH	12V, 7.5A	200-240 VAC	ENEC、CE、CB、CCC、RoHS、REACH	180*60*35mm	0.45kg	IP20 with terminals
	KVF-24090-TDH	24V, 3.75A					
80W 	KVF-12080-TDH	12V, 6.66A	200-240 VAC	TUV-CE、CB CCC、RoHS、REACH	230*70*43mm	1.05kg	IP66
	KVF-24080-TDH	24V, 3.34A					
	KVF-36080-TDH	36V, 2.22A					
	KVF-48080-TDH	48V, 1.67A					

V+ ADJ -

Note: 30W 60W 75W 90W drivers with slightly adjustable output voltage as below:
12V output voltage: 10-13V 24V output voltage: 21.5-25.5V 36V output voltage: 36-38V 48V output voltage: 48-50V

KVF Series

Triac/ Phase-cut Dimming

Constant Votage PF≥0.95 Loading: 10-100% Dimming: 0.1-100% 5 years warranty Dimming

Power & Picture	Model	Output	Input	Certificate	Size	N.W	IP
100W 	KVF-12100-TDH	12V, 8.33A	200-240 VAC	TUV-CE、CB、SAA、CCC、RoHS、REACH	230*70*43mm	1.05kg	IP66
	KVF-24100-TDH	24V, 4.17A					
	KVF-36100-TDH	36V, 2.78A		CE、RoHS、REACH			
	KVF-48100-TDH	48V, 2.09A					
	KVF-12100-TDHS	12V, 8.33A		ENEC、CE、CB、RoHS、REACH	330*30*22mm	0.29kg	IP20 with terminals
	KVF-24100-TDHS	24V, 4.17A					
	KVF-12100-TDHL	12V, 8.33A		ENEC、CE、CB、RoHS、REACH	330*32*23mm	0.55kg	IP66
	KVF-24100-TDHL	24V, 4.17A					
120W 	KVF-12120-TDH	12V, 10A	200-240 VAC	TUV-CE、CB、SAA、CCC、RoHS、REACH	230*70*43mm	1.05kg	IP66
	KVF-24120-TDH	24V, 5A					
	KVF-36120-TDH	36V, 3.33A					
	KVF-48120-TDH	48V, 2.5A					
150W 	KVF-12150-TDH	12V, 12.5A	200-240 VAC	TUV-CE、CB、SAA、CCC、RoHS、REACH	256*78*47mm	1.45kg	IP66
	KVF-24150-TDH	24V, 6.25A					
	KVF-36150-TDH	36V, 4.17A					
	KVF-48150-TDH	48V, 3.13A					
	KVF-12150-TDHS	12V, 12.5A		ENEC、CE、CB、SAA、RoHS、REACH	368*30*22.5mm	0.29kg	IP20 with terminals
	KVF-24150-TDHS	24V, 6.25A					
	KVF-12150-TDHL	12V, 12.5A		ENEC、CE、CB、SAA、RoHS、REACH	368*32*23mm	0.55kg	IP66
	KVF-24150-TDHL	24V, 6.25A					
200W 	KVF-12200-TDH	12V, 16.6A	200-240 VAC	TUV-CE、CB、SAA、RoHS、REACH	256*78*47mm	1.45kg	IP66
	KVF-24200-TDH	24V, 8.33A					
	KVF-36200-TDH	36V, 5.56A		CE、RoHS、REACH			
	KVF-48200-TDH	48V, 4.17A					
300W 	KVF-12300-TDH	12V, 25A	200-240 VAC	TUV-CE、CB、SAA、RoHS、REACH	276*78*47mm	1.65kg	IP66
	KVF-24300-TDH	24V, 12.5A					
	KVF-36300-TDH	36V, 8.33A					
	KVF-48300-TDH	48V, 6.25A		CE、RoHS、REACH			
320W 	KVF-12320-TDH	12V, 26.67A	200-240 VAC	TUV-CE、CB、SAA、RoHS	276*78*47mm	1.65kg	IP66
	KVF-24320-TDH	24V, 13.34A					
	KVF-36320-TDH	36V, 8.89A		CE、RoHS			
	KVF-48320-TDH	48V, 6.67A					
360W 	KVF-12360-TDH	12V, 30A	200-240 VAC	CE、SAA、RoHS	276*78*47mm	1.65kg	IP66
	KVF-24360-TDH	24V, 15A					
	KVF-36360-TDH	36V, 10A		CE、RoHS			
	KVF-48360-TDH	48V, 7.5A					
600W 	KVF-12500-TDH	12V, 41.67A	200-240 VAC	CE、RoHS	322*78*43.7mm	2kg	IP66
	KVF-24600-TDH	24V, 25A					
	KVF-36600-TDH	36V, 16.67A					
	KVF-48600-TDH	48V, 12.5A					

KVP Series

Triac/ Phase-cut Dimming

Constant Votage PWM output Loading: 5-100% Dimming: 0.1-100%

Overview

SC Power's PWM output KVP Series of Constant Voltage Triac dimming LED driver, is designed to work with leading edge Triac dimmers or lighting system such as Lutron, C-BUS, Clipsal etc.

Outstanding Performance

- PWM output, Not alter LED CRI
- Leading edge
- Flicker-free
- Continuous & Smooth & Stable
- Full Dimming range: 0.1-100%
- 5% minimum load

Different versions

KVP-xxxxx-TD



8W-15W items:
IP20 for indoor, small size, low-profile plastic shell with cable
25W-75W items:
IP20 for indoor use
Low-profile endurable plastic shell with terminals
Enable easy and safe installation

KVP-xxxxx-TD



80W-200W items:
IP66 for waterproof use
Compact aluminum shell

Perfect for LED fixtures

Perfect to use for LED tape/strip, modules, LED bar light, cabinet light, kitchen light and other LED fixtures.







KVP Series

Triac/ Phase-cut Dimming

Constant Votage PWM output Loading: 5-100% Dimming: 0.1-100% Dimming

Power & Picture		Model	Output	Input	Certificate	Size	N.W	IP
8W		KVP-12008-TD	12V, 0.66A	180-240 VAC	CE、RoHS、REACH	80*36*23mm	0.1kg	IP20
		KVP-24008-TD	24V, 0.33A					
15W		KVP-12015-TD	12V, 1.25A	180-240 VAC	CE、RoHS、REACH	95*40*25mm	0.12kg	IP20
		KVP-24015-TD	24V, 0.625A					
25W		KVP-12025-TD	12V, 2.08A	200-240 VAC	CE、SAA、RoHS、REACH	155*54*20mm	0.21kg	IP20 with terminals
		KVP-24025-TD	24V, 1.04A					
50W		KVP-12050-TD	12V, 4.16A	200-240 VAC	CE、SAA、RoHS、REACH	178*61*24mm	0.35kg	IP20 with terminals
		KVP-24050-TD	24V, 2.08A					
75W		KVP-12075-TD	12V, 6.25A	200-240 VAC	CE、SAA、RoHS、REACH	180*60*35mm	0.48kg	IP20 with terminals
		KVP-24075-TD	24V, 3.13A					
80W		KVP-12080-TD	12V, 6.66A	200-240 VAC	CE、SAA、RoHS、REACH	230*70*43mm	1.05kg	IP66
		KVP-24080-TD	24V, 3.33A					
100W		KVP-12100-TD	12V, 8.33A	200-240 VAC	CE、SAA、RoHS、REACH	230*70*43mm	1.05kg	IP66
		KVP-24100-TD	24V, 4.16A					
120W		KVP-12120-TD	12V, 10A	200-240 VAC	CE、SAA、RoHS、REACH	230*70*43mm	1.05kg	IP66
		KVP-24120-TD	24V, 5A					
150W		KVP-12150-TD	12V, 12.5A	200-240 VAC	CE、SAA、RoHS、REACH	256*78*47mm	1.45kg	IP66
		KVP-24150-TD	24V, 6.25A					
200W		KVP-12200-TD	12V, 16.6A	200-240 VAC	CE、SAA、RoHS、REACH	256*78*47mm	1.45kg	IP66
		KVP-24200-TD	24V, 8.33A					

www.scpower.vn

KIF Series

Triac/ Phase-cut Dimming

Constant Current - DIP Adjustment Dimming: 1-100% Dimming

ON OFF

Power & Picture	Model	Output	Input	Certificate	Size	N.W.	IP
10W 	KIF-010-TDH DIP Adjustment (Multi-current)	3-42V 100mA 3-42V 150mA 3-42V 200mA 3-40V 250mA 3-33V 300mA 3-29V 350mA 3-25V 400mA 3-22V 450mA	200-240VAC	ENEC Pending CE、SAA、 RoHS、REACH	135*30*20mm	0.1kg	IP20 with terminals

ON OFF

Power & Picture	Model	Output	Input	Certificate	Size	N.W.	IP
20W 	KIF-020-TDH DIP Adjustment (Multi-current)	3-42V 250mA 3-42V 350mA 3-42V 400mA 3-42V 450mA 3-40V 500mA 3-36V 550mA 3-33V 600mA 3-29V 700mA	200-240VAC	ENEC Pending CE、SAA、 RoHS、REACH	159.5*43*20mm	0.2kg	IP20 with terminals

KIF Series

Triac/ Phase-cut Dimming

Constant Current - NFC Adjustment Dimming: 1-100% Dimming

Power & Picture	Model	Output	Input	Certificate	Size	N.W.	IP
30W 	KIF-030-TDHS NFC Adjustment (Multi-current)	3-65V 250mA 3-65V 300mA 3-65V 350mA 3-65V 400mA 3-65V 450mA 3-60V 500mA 3-55V 550mA 3-50V 600mA 3-46V 650mA 3-43V 700mA	200-240VAC	ENEC、CE、 RoHS Pending	260*30*18.5mm	0.2kg	IP20 with terminals
	KIF-65250-TDHL KIF-65300-TDHL KIF-65350-TDHL KIF-65400-TDHL KIF-65450-TDHL KIF-60500-TDHL KIF-55550-TDHL KIF-50600-TDHL KIF-46650-TDHL KIF-43700-TDHL	3-65V 250mA 3-65V 300mA 3-65V 350mA 3-65V 400mA 3-65V 450mA 3-60V 500mA 3-55V 550mA 3-50V 600mA 3-46V 650mA 3-43V 700mA	200-240VAC	ENEC、CE、 RoHS Pending	260*32*20mm	0.35kg	Ip66

KIF Series

Triac/ Phase-cut Dimming

Constant Current - DIP Adjustment

Dimming: 1-100% Dimming

T ON ⊥ OFF

Power & Picture		Model	Output	Input	Certificate	Size	N.W.	IP
40W		KIF-040-TDH DIP Adjustment (Multi-current)	3-65V 300mA ⊥⊥⊥⊥ 3-65V 350mA T⊥⊥⊥ 3-65V 400mA ⊥T⊥⊥ 3-65V 450mA TT⊥⊥ 3-65V 500mA ⊥⊥T⊥ 3-65V 550mA T⊥T⊥ 3-65V 600mA ⊥TT⊥ 3-62V 650mA TTT⊥ 3-57V 700mA ⊥⊥⊥T 3-50V 800mA T⊥⊥T 3-45V 900mA ⊥T⊥T 3-40V 1000mA TT⊥T 3-37V 1100mA ⊥⊥TT 3-34V 1200mA T⊥TT 3-31V 1300mA ⊥TTT 3-29V 1400mA TTTT	200-240VAC	ENEC Pending SAA、CE、 RoHS、 REACH	171.5*54*20mm	0.2kg	IP20 with terminals
60W		KIF-060-TDH DIP Adjustment (Multi-current)	3-65V 600mA ⊥⊥⊥⊥ 3-65V 700mA T⊥⊥⊥ 3-65V 800mA ⊥T⊥⊥ 3-65V 900mA TT⊥⊥ 3-60V 1000mA ⊥⊥T⊥ 3-55V 1100mA T⊥T⊥ 3-50V 1200mA ⊥TT⊥ 3-46V 1300mA TTT⊥ 3-43V 1400mA ⊥⊥⊥T 3-40V 1500mA T⊥⊥T 3-38V 1600mA ⊥T⊥T 3-35V 1700mA TT⊥T 3-33V 1800mA ⊥⊥TT 3-32V 1900mA T⊥TT 3-30V 2000mA ⊥TTT 3-29V 2100mA TTTT	200-240VAC	ENEC Pending SAA、CE、 RoHS、 REACH	192.5*62*24mm	0.3kg	IP20 with terminals

KIF Series

Triac/ Phase-cut Dimming

Constant Current - NFC Adjustment

Dimming: 1-100% Dimming

Power & Picture		Model	Output	Input	Certificate	Size	N.W.	IP
60W		KIF-060-TDHS NFC Adjustment (Multi-current)	3-65V 600mA 3-65V 700mA 3-65V 900mA 3-57V 1050mA 3-50V 1200mA 3-43V 1400mA 3-40V 1500mA 3-34V 1750mA 3-30V 2000mA 3-29V 2100mA	200-240VAC	ENEC、SAA、 CE、RoHS CB、Pending	300*30*18.5mm	0.3kg	IP20 with terminals
		KIF-65600-TDHL KIF-65700-TDHL KIF-65900-TDHL KIF-571050-TDHL KIF-501200-TDHL KIF-431400-TDHL KIF-401500-TDHL KIF-341750-TDHL KIF-302000-TDHL KIF-292100-TDHL	3-65V 600mA 3-65V 700mA 3-65V 900mA 3-57V 1050mA 3-50V 1200mA 3-43V 1400mA 3-40V 1500mA 3-34V 1750mA 3-30V 2000mA 3-29V 2100mA	200-240VAC	ENEC、SAA、 CE、RoHS CB、Pending	300*32*20mm	0.45kg	Ip66

PART 2

Triac/0-10V/1-10V/Potentiometer/10V PWM (5 in 1) Dimmable LED Driver Series

(For LED strip, light bar, LED module, panel light, down light and other LED light)





30W-150W



30W-150W



10W-60W



30W-60W



80W-600W

Wiring diagram

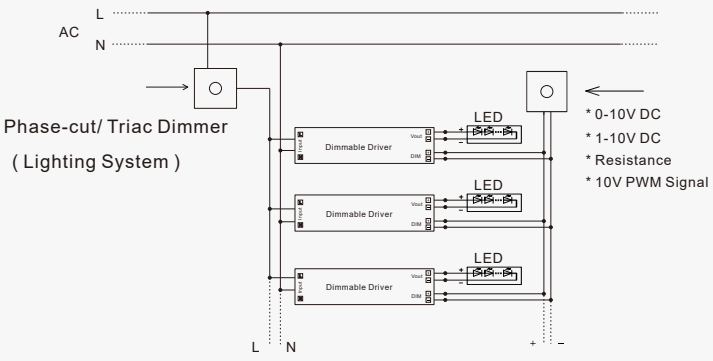

Triac/ 0/1-10V 5 in 1

Triac dimming

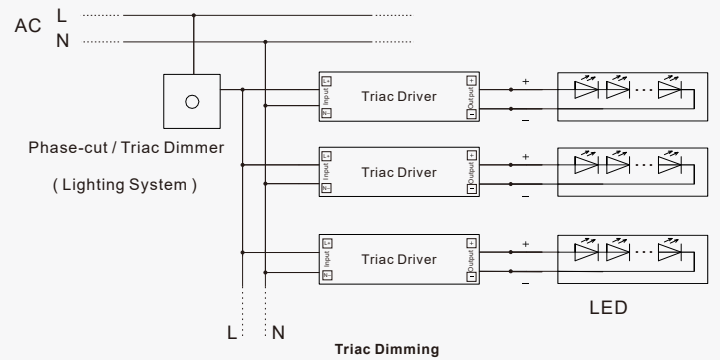

Triac Dimming

0/1-10V dimming

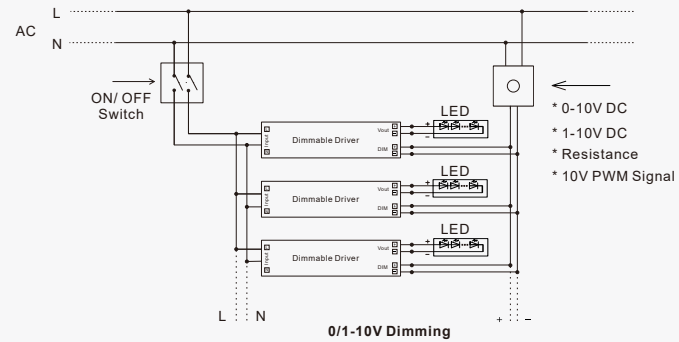

0/1-10V Dimming

KVG Series

Triac/ 0-10V/ 1-10V/ Potentiometer / 10V PWM (5 in 1)

Constant Voltage PF≥0.95 Loading: 10-100% Dimming: 0.1-100% 5 years warranty

Overview

SC Power's PWM output KVG series, Triac / 0-10V/ 1-10V/ Potentiometer / 10V PWM (5 in 1) compatible solution dimmable driver, making it easy for projects and simplify the inventory.

They are compatible with a wide array of popular dimmers, including ELV & MLV & TRIAC dimmers, 0-10V | 1-10V | Resistance | 10V PWM dimmer and various lighting control system, such as Lutron, Leviton,Crestron ,etc.This makes the drivers easy to integrate into existing lighting installations.

The driver provides smooth and no flicker 0-100% full dimmable range and stepless dimmable performance.

Outstanding Performance

- Triac/ 0-10V/ 1-10V / Potentiometer / 10V PWM (5 in 1)
- PWM output, Not alter LED CRI
- High power factor, PF≥0.95
- 5 years warranty
- Continuous & Smooth & Stable dimming
- Full Dimming range: 0.1-100%
- 2% minimum load
- Flicker-free

Different versions

KVG-xxxxx-DH



30W-60W items (IP20):
Low-profile endurable plastic shell, with slightly adjustable output voltage

80W-600W items (IP66):
Compact aluminum shell for outdoor waterproof use

KVG-xxxxx-DHS



30W-150W items:
Linear plastic shell (IP 20)

KVG-xxxxx-DHL



30W-150W items:
Linear aluminum shell for outdoor waterproof use(IP 66)

Perfect for LED fixtures

Perfect to use for LED tape/strip, modules, LED bar light, cabinet light, kitchen light and other LED fixtures.







KVG Series

Triac/ 0-10V/ 1-10V/ Potentiometer / 10V PWM (5 in 1)

Constant Voltage PF≥0.95 Loading: 10-100% Dimming: 0.1-100% 5 years warranty Dimming

Power & Picture	Model	Output	Input	Certificate	Size	N.W	IP
30W	KVG-12030-DH	12V, 2.5A	200-240 VAC	TUV-CE、CB Pending、RoHS、CE REACH	155*54*20mm	0.21kg	IP20 with terminals
	KVG-24030-DH	24V, 1.25A					
	KVG-36030-DH	36V, 0.83A					
	KVG-48030-DH	48V, 0.63A					
	KVG-12030-DHS	12V, 2.5A		TUV-CE、CB Pending、RoHS、SAA REACH	260*30*18.5mm	0.2kg	IP20 with terminals
	KVG-24030-DHS	24V, 1.25A					
	KVG-12030-DHL	12V, 2.5A		TUV-CE、CB Pending、RoHS、CE、SAA、REACH	260*32*20mm	0.34kg	IP66
	KVG-24030-DHL	24V, 1.25A					
36W	KVG-12036-DHS	12V, 3A	200-240 VAC	TUV-CE、CB Pending、RoHS、CE、SAA、REACH	260*30*18.5mm	0.2kg	IP20 with terminals
	KVG-24036-DHS	24V, 1.5A					
	KVG-12036-DHL	12V,3A		TUV-CE、CB、Pending、RoHS、CE、SAA、REACH	260*32*20mm	0.34kg	IP66
	KVG-24036-DHL	24V, 1.5A					
60W	KVG-12060-DH	12V, 5A	200-240 VAC	TUV-CE、CB Pending、RoHS、CE REACH	178*61*24mm	0.35kg	IP20 with terminals
	KVG-24060-DH	24V, 2.5A					
	KVG-36060-DH	36V, 1.67A					
	KVG-48060-DH	48V, 1.25A					
	KVG-12060-DHS	12V, 5A		TUV-CE、CB Pending、RoHS、CE、SAA、REACH	300*30*18.5mm	0.3kg	IP20 with terminals
	KVG-24060-DHS	24V, 2.5A					
	KVG-12060-DHL	12V, 5A		TUV-CE、CB Pending、RoHS、CE、SAA、REACH	300*32*20mm	0.45kg	IP66
	KVG-24060-DHL	24V, 2.5A					
80W	KVG-12080-DH	12V, 6.66A	200-240 VAC	TUV-CE、CB Pending、RoHS、CE REACH	230*70*43mm	1.1kg	IP66
	KVG-24080-DH	24V, 3.34A					
	KVG-36080-DH	36V, 2.22A					
	KVG-48080-DH	48V, 1.67A					

V+ ADJ -

Note: 30W 60W drivers with slightly adjustable output voltage as below:
12V output voltage: 10-13V 24V output voltage: 21.5-25.5V 36V output voltage: 36-38V 48V output voltage: 48-50V

KVG Series

Triac/ 0-10V/ 1-10V/ Potentiometer / 10V PWM (5 in 1)

Constant Voltage PF≥0.95 Loading: 10-100% Dimming: 0.1-100% 5 years warranty Dimming

Power & Picture	Model	Output	Input	Certificate	Size	N.W	IP
100W 	KVG-12100-DH	12V, 8.34A	200-240 VAC	TUV-CE、CB Pending、CE、RoHS、REACH	230*70*43mm	1.1kg	IP66
	KVG-24100-DH	24V, 4.17A					
	KVG-36100-DH	36V, 2.78A					
	KVG-48100-DH	48V, 2.09A					
	KVG-12100-DHS	12V, 8.34A		TUV-CE、CB Pending、SAA、CE、RoHS、REACH	330*30*22mm	0.4kg	IP20 with terminals
	KVG-24100-DHS	24V, 4.17A					
	KVG-12100-DHL	12V, 8.34A		TUV-CE、CB Pending、SAA、CE、RoHS、REACH	330*32*23mm	0.55kg	IP66
	KVG-24100-DHL	24V, 4.17A					
120W 	KVG-12120-DH	12V, 10A	200-240 VAC	TUV-CE、CB Pending、CE、RoHS、REACH	230*70*43mm	1.1kg	IP66
	KVG-24120-DH	24V, 5A					
	KVG-36120-DH	36V, 3.33A					
	KVG-48120-DH	48V, 2.5A					
150W 	KVG-12150-DH	12V, 12.5A	200-240 VAC	TUV-CE、CB Pending、CE、RoHS、REACH	256*78*47mm	1.5kg	IP66
	KVG-24150-DH	24V, 6.25A					
	KVG-36150-DH	36V, 4.17A					
	KVG-48150-DH	48V, 3.13A					
	KVG-12150-DHS	12V, 12.5A		ENEC、CE、CB SAA、RoHS、REACH	368*30*22.5mm	0.45kg	IP20 with terminals
	KVG-24150-DHS	24V, 6.25A					
	KVG-12150-DHL	12V, 12.5A		ENEC、CE、CB SAA、RoHS、REACH	368*32*23mm	0.6kg	IP66
	KVG-24150-DHL	24V, 6.25A					
200W 	KVG-12200-DH	12V, 16.6A	200-240 VAC	TUV-CE、CB Pending、RoHS、REACH	256*78*47mm	1.5kg	IP66
	KVG-24200-DH	24V, 8.34A					
	KVG-36200-DH	36V, 5.56A					
	KVG-48200-DH	48V, 4.17A					
300W 	KVG-12300-DH	12V, 25A	200-240 VAC	TUV-CE、CB Pending、CE、RoHS、REACH	276*78*47mm	1.7kg	IP66
	KVG-24300-DH	24V, 12.5A					
	KVG-36300-DH	36V, 8.33A					
	KVG-48300-DH	48V, 6.25A					
320W 	KVG-12320-DH	12V, 26.67A	200-240 VAC	TUV-CE、CB Pending、CE、RoHS	276*78*47mm	1.7kg	IP66
	KVG-24320-DH	24V, 13.34A					
	KVG-36320-DH	36V, 8.89A					
	KVG-48320-DH	48V, 6.67A					
360W 	KVG-12360-DH	12V, 30A	200-240 VAC	TUV-CE、CB Pending、CE、RoHS	276*78*47mm	1.7kg	IP66
	KVG-24360-DH	24V, 15A					
	KVG-36360-DH	36V, 10A					
	KVG-48360-DH	48V, 7.5A					
600W 	KVG-12500-DH	12V, 41.67A	200-240 VAC	TUV-CE、CB、Pending CE、RoHS	322*78*43.7mm	2kg	IP66
	KVG-24600-DH	24V, 25A					
	KVG-36600-DH	36V, 16.67A					
	KVG-48600-DH	48V, 12.5A					

KIG Series

Triac/ 0-10V/ 1-10V/ Potentiometer / 10V PWM (5 in 1)

Constant Current - DIP Adjustment Dimming: 1-100% 5 years warranty Dimming

ON OFF

Power & Picture	Model	Output	Input	Certificate	Size	N.W.	IP
10W 	KIG-010-DH DIP Adjustment (Multi-current)	3-42V 100mA ▼▼▼	200-240VAC	ENEC Pending SAA、CE、RoHS、REACH	135*30*20mm	0.1kg	IP20 with terminals
		3-42V 150mA ▲▼▼					
		3-42V 200mA ▼▲▼					
		3-40V 250mA ▲▲▼					
		3-33V 300mA ▼▼▲					
		3-29V 350mA ▲▼▲					
		3-25V 400mA ▼▲▲					
		3-22V 450mA ▲▲▲					

ON OFF

Power & Picture	Model	Output	Input	Certificate	Size	N.W.	IP
20W 	KIG-020-DH DIP Adjustment (Multi-current)	3-42V 250mA ▲▲▲	200-240VAC	ENEC Pending SAA、CE、RoHS、REACH	159.5*43*20mm	0.2kg	IP20 with terminals
		3-42V 350mA ▼▲▲					
		3-42V 400mA ▲▼▲					
		3-42V 450mA ▲▲▼					
		3-40V 500mA ▼▼▲					
		3-36V 550mA ▼▲▼					
		3-33V 600mA ▲▼▼					
		3-29V 700mA ▼▼▼					

www.scpower.vn

KIG Series

Triac/ 0-10V/ 1-10V/ Potentiometer / 10V PWM (5 in 1)

Constant Current - NFC Adjustment Dimming: 1-100% 5 years warranty Dimming

Power & Picture		Model	Output	Input	Certificate	Size	N.W.	IP
30W		KIG-030-DHS NFC Adjustment (Multi-current)	3-65V 250mA	200-240VAC	ENEC Pending CE、RoHS	260*30*18.5mm	0.3kg	IP20 with terminals
			3-65V 300mA					
			3-65V 350mA					
			3-65V 400mA					
			3-65V 450mA					
			3-60V 500mA					
			3-55V 550mA					
			3-50V 600mA					
			3-46V 650mA					
			3-43V 700mA					
		KIG-65250-DHL	3-65V 250mA	200-240VAC	ENEC Pending CE、RoHS	260*32*20mm	0.35kg	IP66
		KIG-65300-DHL	3-65V 300mA					
		KIG-65350-DHL	3-65V 350mA					
		KIG-65400-DHL	3-65V 400mA					
		KIG-65450-DHL	3-65V 450mA					
		KIG-60500-DHL	3-60V 500mA					
		KIG-55550-DHL	3-55V 550mA					
		KIG-50600-DHL	3-50V 600mA					
		KIG-46650-DHL	3-46V 650mA					
		KIG-43700-DHL	3-43V 700mA					

KIG Series

Triac/ 0-10V/ 1-10V/ Potentiometer / 10V PWM (5 in 1)

Constant Current - DIP Adjustment Dimming: 1-100% 5 years warranty Dimming

T ON ⊥ OFF

Power & Picture		Model	Output	Input	Certificate	Size	N.W.	IP
40W		KIG-040-DH DIP Adjustment (Multi-current)	3-65V 300mA ⊥⊥⊥⊥	200-240VAC	ENEC Pending CE、CB、SAA、RoHS、REACH	192.5*62*24mm	0.2kg	IP20 with terminals
			3-65V 350mA T⊥⊥⊥					
			3-65V 400mA ⊥T⊥⊥					
			3-65V 450mA TT⊥⊥					
			3-65V 500mA ⊥⊥T⊥					
			3-65V 550mA T⊥T⊥					
			3-65V 600mA ⊥TT⊥					
			3-62V 650mA TTT⊥					
			3-57V 700mA ⊥⊥⊥T					
			3-50V 800mA T⊥⊥T					
			3-45V 900mA ⊥T⊥T					
			3-40V 1000mA TT⊥T					
			3-37V 1100mA ⊥⊥TT					
			3-34V 1200mA T⊥TT					
			3-31V 1300mA ⊥TTT					
			3-29V 1400mA TTTT					
60W		KIG-060-DH DIP Adjustment (Multi-current)	3-65V 600mA ⊥⊥⊥⊥	200-240VAC	ENEC Pending CE、CB、SAA、RoHS、REACH	171.5*54*20mm	0.3kg	IP20 with terminals
			3-65V 700mA T⊥⊥⊥					
			3-65V 800mA ⊥T⊥⊥					
			3-65V 900mA TT⊥⊥					
			3-60V 1000mA ⊥⊥T⊥					
			3-55V 1100mA T⊥T⊥					
			3-50V 1200mA ⊥TT⊥					
			3-46V 1300mA TTT⊥					
			3-43V 1400mA ⊥⊥⊥T					
			3-40V 1500mA T⊥⊥T					
			3-38V 1600mA ⊥T⊥T					
			3-35V 1700mA TT⊥T					
			3-33V 1800mA ⊥⊥TT					
			3-32V 1900mA T⊥TT					
			3-30V 2000mA ⊥TTT					
			3-29V 2100mA TTTT					

KIG Series

Triac/ 0-10V/ 1-10V/ Potentiometer / 10V PWM (5 in 1)
Constant Current - NFC Adjustment Dimming: 1-100% 5 years warranty Dimming

Power & Picture		Model	Output	Input	Certificate	Size	N.W.	IP
60W		KIG-060-DHS NFC Adjustment (Multi-current)	3-65V 600mA	200-240VAC	ENEC Pending CE、RoHS	300*30*18.5mm	0.3kg	IP20 with terminals
			3-65V 700mA					
			3-65V 900mA					
			3-57V 1050mA					
			3-50V 1200mA					
			3-43V 1400mA					
			3-40V 1500mA					
			3-34V 1750mA					
			3-30V 2000mA					
			3-29V 2100mA					
		KIG-65600-DHL	3-65V 600mA	200-240VAC	ENEC Pending CE、RoHS	300*32*20mm	0.45kg	Ip66
		KIG-65700-DHL	3-65V 700mA					
		KIG-65900-DHL	3-65V 900mA					
		KIG-571050-DHL	3-57V 1050mA					
		KIG-501200-DHL	3-50V 1200mA					
		KIG-431400-DHL	3-43V 1400mA					
		KIG-401500-DHL	3-40V 1500mA					
		KIG-341750-DHL	3-34V 1750mA					
		KIG-302000-DHL	3-30V 2000mA					
		KIG-292100-DHL	3-29V 2100mA					

PART 3

0-10V/1-10V/Potentiometer/10V PWM (4 in 1) Dimmable LED Driver Series

(For LED strip, light bar, LED moudle, pannel light, down light and other LED light)




30W-150W


30W-150W


30W-36W
Waterproof IP67


10W-60W


10W-20W


30W-45W


30W-60W


60W-600W

Wiring diagram

Diagram 1

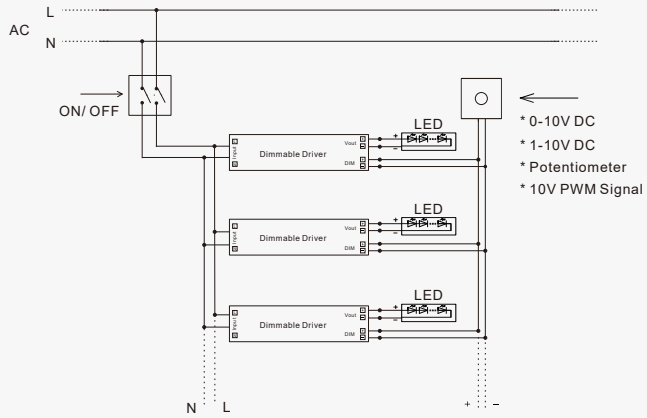

Diagram 2

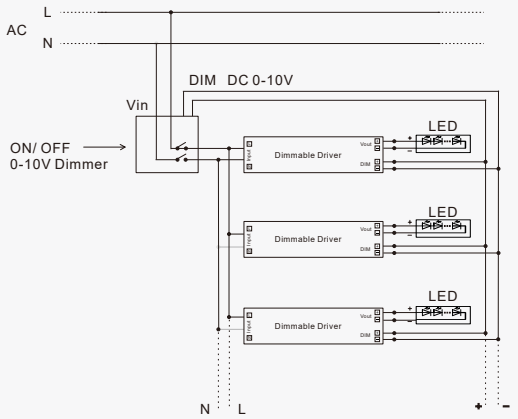

0-10V Dimmer (Page 70)


DIMP50-T1


DIMP50-T2


DIMR50-T1

0-10V/1-10V/Potentiometer/10V PWM (4 in 1) Dimmable LED Driver Series

Overview

SC Power's 0-10V/1-10V/Potentiometer/ 10V PWM 4 in 1 dimmable driver, is compatible with all standard 0-10V/1-10V/ Potentiometer/ 10V PWM dimmer and various lighting control system,such as Lutron, Clispal,C-bus etc.
The driver provide smooth and no flicker 0-100% full dimming range and stepless dimming performance.
KVD series with PWM style output, which is able to maintain the color temperature and the brightness homogeneity when driving all kinds of LED strips.
KV-DIM series with 12V 24V 36V 48V output voltage for choice are designed by traditional solutions.

Outstanding Performance

- 0-10V/ 1-10V / Potentiometer / 10V PWM (4 in 1)
- PWM output, Not alter LED CRI
- High power factor, PF>0.95
- 5 years warranty
- Continuous & Smooth & Stable
- Full Dimming range: 0.1-100%
- 5% minimum load
- Flicker-free

Different versions

KVD/KV/KID-xxxxx-P-DIM



10W-150W items:
Low-profile endurable plastic shell (IP20)

KVD/KV-xxxxx-A-DIM



30W-150W items:
Linear aluminum shell for outdoor waterproof use
60W-600W items:
Compact aluminum shell for outdoor waterproof use

Perfect for LED fixtures

Perfect to use for LED tape/strip, modules, LED bar light, cabinet light, kitchen light, down light, panel light and other LED fixtures.



KVD Series

0-10V/ 1-10V/ Potentiometer/ 10V PWM (4 in 1)

Constant Voltage PWM output PF≥0.95 Dimming: 0.1-100% 5 years warranty Dimming

Power & Picture		Model	Output	Input	Certificate	Size	N.W	IP
30W		KVD-12030-DIM	12V, 2.5A	100-277 VAC	UL、cUL、FCC、CE、RoHS、REACH	155*54*20mm	0.21kg	IP20 with terminals
		KVD-24030-DIM	24V, 1.25A					
		KVD-36030-DIM	36V, 0.83A					
		KVD-48030-DIM	48V, 0.63A					
		KVD-12030-DIMS	12V, 2.5A		UL、cUL、FCC、CE、RoHS、REACH	260*30*18.5mm	0.2kg	IP20 with terminals
		KVD-24030-DIMS	24V, 1.25A					
		KVD-12030-DIML	12V, 2.5A		UL、cUL、FCC、CE、RoHS、REACH	260*32*20mm	0.35kg	IP66
		KVD-24030-DIML	24V, 1.25A					
36W		KVD-12036-DIMS	12V, 3A	100-277 VAC	UL、cUL、FCC、CE、RoHS、REACH	260*30*18.5mm	0.25kg	IP20 with terminals
		KVD-24036-DIMS	24V, 1.5A					
		KVD-12036-DIML	12V,3A		UL、cUL、FCC、CE、RoHS、REACH	260*32*20mm	0.35kg	IP66
		KVD-24036-DIML	24V, 1.5A					
60W		KVD-12060-DIM	12V, 5A	100-277 VAC	UL、cUL、FCC、CE、RoHS、REACH	178*61*24mm	0.35kg	IP20 with terminals
		KVD-24060-DIM	24V, 2.5A					
		KVD-36060-DIM	36V, 1.67A					
		KVD-48060-DIM	48V, 1.25A					
		KVD-12060-DIMS	12V, 5A		UL、cUL、FCC、CE、RoHS、REACH	300*30*18.5mm	0.32kg	IP20 with terminals
		KVD-24060-DIMS	24V, 2.5A					
		KVD-12060-DIML	12V, 5A		UL、cUL、FCC、CE、RoHS、REACH	300*32*20mm	0.45kg	IP66
		KVD-24060-DIMS	24V, 2.5A					
80W		KVD-12080-DIM	12V, 6.66A	100-277 VAC	UL、cUL、FCC、CE、RoHS、REACH	230*70*43mm	1.1kg	IP66
		KVD-24080-DIM	24V, 3.34A					
		KVD-36080-DIM	36V, 2.22A					
		KVD-48080-DIM	48V, 1.67A					

V+ ADJ -

Note: 30W 60W 75W 90W drivers with slightly adjustable output voltage as below:
12V output voltage: 10-13V 24V output voltage: 21.5-25.5V 36V output voltage: 36-38V 48V output voltage: 48-50V

KVD Series

0-10V/ 1-10V/ Potentiometer/ 10V PWM (4 in 1)

Constant Voltage PWM output PF≥0.95 Dimming: 0.1-100% 5 years warranty Dimming

Power & Picture		Model	Output	Input	Certificate	Size	N.W	IP
100W		KVD-12100-DIM	12V, 8.33A	100-277 VAC	UL、cUL、FCC、CE、RoHS、REACH	230*70*43mm	1.1kg	IP66
		KVD-24100-DIM	24V, 4.17A					
		KVD-36100-DIM	36V, 2.78A					
		KVD-48100-DIM	48V, 2.09A					
		KVD-12100-DIMS	12V, 8.33A		UL、cUL、FCC、CE、RoHS、REACH	330*30*22mm	0.32kg	IP20 with terminals
		KVD-24100-DIMS	24V, 4.16A					
		KVD-12100-DIML	12V, 8.33A		UL、cUL、FCC、CE、RoHS、REACH	330*32*23mm	0.47kg	IP66
		KVD-24100-DIML	24V, 4.16A					
120W		KVD-12120-DIM	12V, 10A	100-277 VAC	UL、cUL、FCC、CE、RoHS、REACH	230*70*43mm	1.1kg	IP66
		KVD-24120-DIM	24V, 5A					
		KVD-36120-DIM	36V, 3.33A					
		KVD-48120-DIM	48V, 2.5A					
150W		KVD-12150-DIM	12V, 12.5A	100-277 VAC	UL、cUL、FCC、CE、RoHS、REACH	256*78*47mm	1.45kg	IP66
		KVD-24150-DIM	24V, 6.25A					
		KVD-36150-DIM	36V, 4.17A					
		KVD-48150-DIM	48V, 3.13A					
		KVD-12150-DIMS	12V, 12.5A	200-240 VAC	ENEC、CE、CB SAA、RoHS、REACH	368*30*22.5mm	0.45kg	IP20 with terminals
		KVD-24150-DIMS	24V, 6.25A					
		KVD-12150-DIML	12V, 12.5A		ENEC、CE、CB SAA、RoHS、REACH	368*32*23mm	0.51kg	IP66
		KVD-24150-DIML	24V, 6.25A					
200W		KVD-12200-DIM	12V, 16.6A	110-277 VAC	UL、cUL、FCC、CE、RoHS、REACH	256*78*47mm	1.45kg	IP66
		KVD-24200-DIM	24V, 8.33A					
		KVD-36200-DIM	36V, 5.56A					
		KVD-48200-DIM	48V, 4.17A					
300W		KVD-12300-DIM	12V, 30A	110-277 VAC	UL、cUL、FCC、CE、RoHS	276*78*48mm	1.63kg	IP66
		KVD-24300-DIM	24V, 15A					
		KVD-36300-DIM	36V, 10A					
		KVD-48300-DIM	48V, 7.5A					
600W		KVD-12500-DIM	12V, 41.67A	200-240 VAC	UL Pending CE、RoHS	322*78*43.7mm	2kg	IP66
		KVD-24600-DIM	24V, 25A					
		KVD-36600-DIM	36V, 16.67A					
		KVD-48600-DIM	48V, 12.5A					

KV-DIM Series

0-10V/ 1-10V/ Potentiometer/ 10V PWM (4 in 1)

Constant Voltage Dimming: 0.1-100% Dimming

Power & Picture		Model	Output	Input	Certificate	Size	N.W	IP
10W		KV-12010-P-DIM	12V, 0.83A	100-265VAC	CE、RoHS、REACH	140*45*27mm	0.15kg	IP20 with terminals
		KV-24010-P-DIM	24V, 0.42A					
		KV-36010-P-DIM	36V, 0.28A					
		KV-48010-P-DIM	48V, 0.21A					
20W		KV-12020-P-DIM	12V, 1.67A	100-265VAC	CE、RoHS、REACH	140*45*27mm	0.15kg	IP20 with terminals
		KV-24020-P-DIM	24V, 0.83A					
		KV-36020-P-DIM	36V, 0.56A					
		KV-48020-P-DIM	48V, 0.42A					
30W		KV-12030-P-DIM	12V, 2.5A	100-265VAC	CE、RoHS、REACH	180*60*35mm	0.45kg	IP20 with terminals
		KV-24030-P-DIM	24V, 1.25A					
		KV-36030-P-DIM	36V, 0.83A					
		KV-48030-P-DIM	48V, 0.63A					
		KV-12030-A-DIM	12V, 2.5A		CE、RoHS、REACH	262*29*20mm	0.35kg	IP67
		KV-24030-A-DIM	24V, 1.25A					
		KV-36030-A-DIM	36V, 0.83A					
36W		KV-12036-P-DIM	12V, 3A	100-265VAC	CE、RoHS、REACH	180*60*35mm	0.45kg	IP20 with terminals
		KV-24036-P-DIM	24V, 1.5A					
		KV-36036-P-DIM	36V, 1A					
		KV-48036-P-DIM	48V, 0.75A					
		KV-12036-A-DIM	12V, 3A		CE、RoHS、REACH	262*29*20mm	0.35kg	IP67
		KV-24036-A-DIM	24V, 1.5A					
		KV-36036-A-DIM	36V, 1A					
45W		KV-12045-P-DIM	12V, 3.75A	100-265VAC	CE、RoHS、REACH	180*60*35mm	0.45kg	IP20 with terminals
		KV-24045-P-DIM	24V, 1.87A					
		KV-36045-P-DIM	36V, 1.25A					
		KV-48045-P-DIM	48V, 0.94A					

KV-DIM Series

0-10V/ 1-10V/ Potentiometer/ 10V PWM (4 in 1)

Constant Voltage Dimming: 0.1-100% Dimming

Power & Picture		Model	Output	Input	Certificate	Size	N.W	IP
60W		KV-12060-A-DIM	12V, 5A	100-265VAC	CE、RoHS、REACH	200*70*43mm	0.9kg	IP66
		KV-24060-A-DIM	24V, 2.5A					
		KV-36060-A-DIM	36V, 1.67A					
		KV-48060-A-DIM	48V, 1.25A					
80W		KV-12080-A-DIM	12V, 6.66A	100-265VAC TUV: 200-240VAC	TUV-CE、CB、RoHS、REACH	200*70*43mm	0.9kg	IP66
		KV-24080-A-DIM	24V, 3.33A					
		KV-36080-A-DIM	36V, 2.23A					
		KV-48080-A-DIM	48V, 1.67A					
100W		KV-12100-A-DIM	12V, 8.33A	100-265VAC TUV: 200-240VAC	TUV-CE、CB、RoHS、REACH	230*70*43mm	1.05kg	IP66
		KV-24100-A-DIM	24V, 4.17A					
		KV-36100-A-DIM	36V, 2.78A					
		KV-48100-A-DIM	48V, 2.09A					
120W		KV-24120-A-DIM	24V, 5A	100-265VAC TUV: 200-240VAC	TUV-CE、CB、RoHS、REACH	230*70*43mm	1.1kg	IP66
		KV-36120-A-DIM	36V, 3.34A					
		KV-48120-A-DIM	48V, 2.5A					
150W		KV-12150-A-DIM	12V, 12.5A	100-265VAC TUV: 200-240VAC	TUV-CE、CB、RoHS、REACH	256*78*47mm	1.5kg	IP66
		KV-24150-A-DIM	24V, 6.25A					
		KV-36150-A-DIM	36V, 4.17A					
		KV-48150-A-DIM	48V, 3.13A					
200W		KV-12200-A-DIM	12V, 16.6A	100-265VAC TUV: 200-240VAC	TUV-CE、CB、RoHS、REACH	256*78*47mm	1.5kg	IP66
		KV-24200-A-DIM	24V, 8.34A					
		KV-36200-A-DIM	36V, 5.56A					
		KV-48200-A-DIM	48V, 4.17A					
300W		KV-12300-A-DIM	12V, 25A	100-265VAC TUV: 200-240VAC	TUV-CE、CB、RoHS、REACH	276*78*47mm	1.7kg	IP66
		KV-24300-A-DIM	24V, 12.5A					
320W		KV-12320-A-DIM	12V, 26.67A		TUV-CE、CB、RoHS、REACH	276*78*47mm	1.7kg	IP66
		KV-24320-A-DIM	24V, 13.33A	170-265VAC	CE、RoHS、REACH			
360W		KV-12360-A-DIM	12V, 30A		CE、RoHS、REACH	276*78*47mm	1.7kg	IP66
		KV-24360-A-DIM	24V, 15A	200-240VAC	TUV-CE、CB、RoHS、REACH			

www.scpower.vn

KV-PDIM Series

CE RoHS

Push/ 0-10V/ 1-10V/ Potentiometer/ 10V PWM (5 in 1) CCT Dimming

Constant Voltage PWM output PF≥0.95 Dimming: 0.1-100% 5 years warranty Dimming CCT

Overview

SC Power's Push/0-10V/1-10V/Resistance/ 10V PWM 5 in 1 dimmable driver, is compatible with all standard push/ 0-10V/1-10V/ Resistance/ 10V PWM dimmer and various lighting control system,such as Lutron, Clispal,C-bus etc.
The driver provide smooth and no flicker and 0.1-100% full dimming range and stepless dimming performance.

Outstanding Performance

- Push/ 0-10V/ 1-10V / Resistance / 10V PWM (5 in 1)
- PWM output, Not alter LED CRI
- High power factor, PF>0.95
- 5 years warranty
- Dimming CCT
- Continuous & Smooth & Stable
- Full Dimming range: 0-100%
- 5% minimum load
- Flicker-free

KV-xxxxx-2C-PDIM



Constant voltage
80W-100W items:
Low-profile endurable plastic shell (IP20)

KV-xxxxx-2C-PDIMA



Constant voltage
80W-300W items:
Compact aluminum shell for outdoor waterproof use (IP66)

Perfect for LED fixtures

Perfect to use for LED tape/strip, modules, LED bar light, cabinet light and other LED fixtures.






KV-PDIM Series

CE RoHS

Push/ 0-10V/ 1-10V/ Potentiometer/ 10V PWM (5 in 1) CCT Dimming

Constant Voltage PWM output PF≥0.95 Dimming: 0.1-100% 5 years warranty Dimming CCT

Power & Picture		Model	Output	Input	Certificate	Size	IP
80W		KV-12080-2C-PDIM	12V, 6.67A	100-277 VAC	CE、RoHS	220*70.5*26.5mm	IP20 with terminals
		KV-24080-2C-PDIM	24V, 3.33A				
		KV-48080-2C-PDIM	48V, 1.67A				
		KV-12080-2C-PDIMA	12V, 6.67A	100-277 VAC	CE、RoHS	230*78*25mm	IP66
		KV-24080-2C-PDIMA	24V, 3.33A				
		KV-48080-2C-PDIMA	48V, 1.67A				
100W		KV-12100-2C-PDIM	12V, 8.33A	100-277 VAC	CE、RoHS	220*70.5*26.5mm	IP20 with terminals
		KV-24100-2C-PDIM	24V, 4.16A				
		KV-48100-2C-PDIM	48V, 2.09A				
		KV-12100-2C-PDIMA	12V, 8.33A	100-277 VAC	CE、RoHS	230*78*25mm	IP66
		KV-24100-2C-PDIMA	24V, 4.16A				
		KV-48100-2C-PDIMA	48V, 2.09A				
120W		KV-12120-2C-PDIMA	12V, 12A	100-277 VAC	CE、RoHS	230*78*25mm	IP66
		KV-24120-2C-PDIMA	24V, 5A				
		KV-48120-2C-PDIMA	48V, 7.5A				
150W		KV-12150-2C-PDIMA	12V, 12.5A	100-277 VAC	CE、RoHS	279*78*25mm	IP66
		KV-24150-2C-PDIMA	24V, 6.25A				
		KV-48150-2C-PDIMA	48V, 3.125A				
200W		KV-12200-2C-PDIMA	12V, 16.67A	110-277 VAC	CE、RoHS	279*78*25mm	IP66
		KV-24200-2C-PDIMA	24V, 8.33A				
		KV-48200-2C-PDIMA	48V, 4.17A				
300W		KV-12300-2C-PDIMA	12V, 25A	110-277 VAC	CE、RoHS	301*78*25mm	IP66
		KV-24300-2C-PDIMA	24V, 12.5A				
		KV-48300-2C-PDIMA	48V, 6.25A				

KID Series

0-10V/ 1-10V/ Potentiometer/ 10V PWM (4 in 1)

Constant Current - DIP Adjustment Dimming: 1-100% 5 years warranty Dimming

ON OFF

Power & Picture		Model	Output	Input	Certificate	Size	N.W.	IP
10W		KID-010-DIM DIP Adjustment (Multi-current)	3-42V 100mA ↑↑↑ 3-42V 150mA ↓↑↑ 3-42V 200mA ↑↓↑ 3-40V 250mA ↓↓↑ 3-33V 300mA ↑↑↓ 3-29V 350mA ↓↑↓ 3-25V 400mA ↑↓↓ 3-22V 450mA ↓↓↓	200-240VAC	ENEC Pending SAA、CE、RoHS、REACH	135*30*20mm	0.1kg	IP20 with terminals

ON OFF

Power & Picture		Model	Output	Input	Certificate	Size	N.W.	IP
20W		KID-020-DIM DIP Adjustment (Multi-current)	3-42V 250mA ↓↓↓ 3-42V 350mA ↑↓↓ 3-42V 400mA ↓↑↓ 3-42V 450mA ↓↓↑ 3-40V 500mA ↑↑↓ 3-36V 550mA ↑↓↑ 3-33V 600mA ↓↑↑ 3-29V 700mA ↑↑↑	200-240VAC	ENEC Pending SAA、CE、RoHS、REACH	159.5*43*20mm	0.2kg	IP20 with terminals

KID Series

0-10V/ 1-10V/ Potentiometer/ 10V PWM (4 in 1)

Constant Current - NFC Adjustment Dimming: 1-100% 5 years warranty Dimming

Power & Picture		Model	Output	Input	Certificate	Size	N.W.	IP
30W		KID-030-DIMS NFC Adjustment (Multi-current)	3-65V 250mA 3-65V 300mA 3-65V 350mA 3-65V 400mA 3-65V 450mA 3-60V 500mA 3-55V 550mA 3-50V 600mA 3-46V 650mA 3-43V 700mA	200-240VAC	ENEC Pending CE、RoHS、	260*30*18.5mm	0.2kg	IP20 with terminals
		KID-65250-DIML KID-65300-DIML KID-65350-DIML KID-65400-DIML KID-65450-DIML KID-60500-DIML KID-55550-DIML KID-50600-DIML KID-46650-DIML KID-43700-DIML	3-65V 250mA 3-65V 300mA 3-65V 350mA 3-65V 400mA 3-65V 450mA 3-60V 500mA 3-55V 550mA 3-50V 600mA 3-46V 650mA 3-43V 700mA	200-240VAC	ENEC Pending CE、RoHS、	260*32*20mm	0.35kg	IP66

KID Series

0-10V/ 1-10V/ Potentiometer/ 10V PWM (4 in 1)

Constant Current - DIP Adjustment

Dimming: 1-100% 5 years warranty Dimming

T ON ⊥ OFF

Power & Picture		Model	Output	Input	Certificate	Size	N.W.	IP
40W		KID-040-DIM DIP Adjustment (Multi-current)	3-65V 300mA ⊥⊥⊥⊥ 3-65V 350mA T⊥⊥⊥ 3-65V 400mA ⊥T⊥⊥ 3-65V 450mA TT⊥⊥ 3-65V 500mA ⊥⊥T⊥ 3-65V 550mA T⊥T⊥ 3-65V 600mA ⊥TT⊥ 3-62V 650mA TTT⊥ 3-57V 700mA ⊥⊥⊥T 3-50V 800mA T⊥⊥T 3-45V 900mA ⊥T⊥T 3-40V 1000mA TT⊥T 3-37V 1100mA ⊥⊥TT 3-34V 1200mA T⊥TT 3-31V 1300mA ⊥TTT 3-29V 1400mA TTTT	200-240VAC	ENEC Pending SAA、CE、 RoHS、 REACH	171.5*54*20mm	0.2kg	IP20 with terminals
60W		KID-060-DIM DIP Adjustment (Multi-current)	3-65V 600mA ⊥⊥⊥⊥ 3-65V 700mA T⊥⊥⊥ 3-65V 800mA ⊥T⊥⊥ 3-65V 900mA TT⊥⊥ 3-60V 1000mA ⊥⊥T⊥ 3-55V 1100mA T⊥T⊥ 3-50V 1200mA ⊥TT⊥ 3-46V 1300mA TTT⊥ 3-43V 1400mA ⊥⊥⊥T 3-40V 1500mA T⊥⊥T 3-38V 1600mA ⊥T⊥T 3-35V 1700mA TT⊥T 3-33V 1800mA ⊥⊥TT 3-32V 1900mA T⊥TT 3-30V 2000mA ⊥TTT 3-29V 2100mA TTTT	200-240VAC	ENEC Pending SAA、CE、 RoHS、 REACH	192.5*62*24mm	0.3kg	IP20 with terminals

KID Series

0-10V/ 1-10V/ Potentiometer/ 10V PWM (4 in 1)

Constant Current - NFC Adjustment

Dimming: 1-100% 5 years warranty Dimming

Power & Picture		Model	Output	Input	Certificate	Size	N.W.	IP
60W		KID-060-DIMS NFC Adjustment (Multi-current)	3-65V 600mA 3-65V 700mA 3-65V 900mA 3-57V 1050mA 3-50V 1200mA 3-43V 1400mA 3-40V 1500mA 3-34V 1750mA 3-30V 2000mA 3-29V 2100mA	200-240VAC	ENEC Pending CE、RoHS、	300*30*18.5mm	0.3kg	IP20 with terminals
		KID-65600-DIML KID-65700-DIML KID-65900-DIML KID-571050-DIML KID-501200-DIML KID-431400-DIML KID-401500-DIML KID-341750-DIML KID-302000-DIML KID-292100-DIML	3-65V 600mA 3-65V 700mA 3-65V 900mA 3-57V 1050mA 3-50V 1200mA 3-43V 1400mA 3-40V 1500mA 3-34V 1750mA 3-30V 2000mA 3-29V 2100mA	200-240VAC	ENEC Pending CE、RoHS、	300*32*20mm	0.45kg	IP66

PART 4

DALI-2 & Push Dim (2 in 1)
Dimmable LED Driver Series

(For LED strip, light bar, LED module, panel light, down light and other LED light)




10W-60W


10W-600W


100W-720W


30W-150W


30W-150W


30W-100W

Wiring diagram

Diagram 1 DALI System

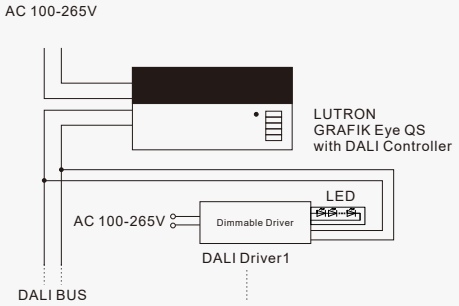

Diagram 2 DALI Dim

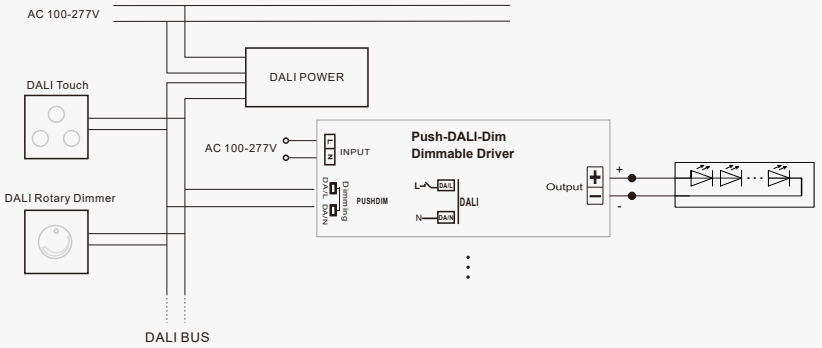

Diagram 3 Push-Dim

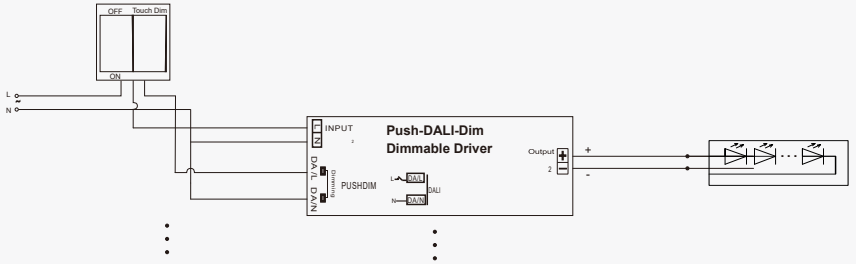

DALI Dimmer (Page 71-72)


DAP-AC-G1


DAR-AC-G1


DAP-G1


DAP-G2


DAP-G3


DAP-G4


DAR-G1


DALI BUS
Power Supply
DA-BP-01

www.scpower.vn

DALI-2 & Push-Dim 2 in 1 Dimmable LED Driver Series

Overview

SC POWER'S 100-277V universal DP dimmable driver with DALI-2 certificate, setting address and fine tuing output voltage by NFC, it's 0.1-100% dimming performance,universal compatibility and flicker-free attract a lot customers. Also with high PF & efficiency are designed for the energy saving, with two dimming function can save mass stocking. Adopted in many led lights, say LED tape/strip, modules, LED bar light, cabinet light, kitchen light and other LED fixtures.

Outstanding Performance

- DALI-2 & Push-Dim 2 in 1
- DiiA member & DALI-2 Certificate
- DT6, DT8
- NFC Function:
  CV - Setting address and Fine-tuning output voltage
  CC - Setting address



- Continuous & Smooth & Stable
- Flicker-free
- Full range, Dimming range:
  CV - 0.1% - 100%
  CC - 1-100%
- 5 years warranty
- Dimming CCT

Different versions

KV-xxxxx-xC-DP2



Constant voltage

30W-90W items:
Low-profile endurable plastic shell (IP20)

60W-600W items:
Compact aluminum shell for outdoor waterproof use(IP66)

30W-150W items:
Linear plastic shell with terminals (IP20)
Linear aluminum shell for outdoor waterproof use(IP 66)

KI-xxx-xC-DP2/D4i



Constant current

10W-720W items:
with DIP / NFC adjustment, makes it easy for muti-current and simplify the inventory
Linear plastic shell with terminals (IP20)
Linear aluminum shell for outdoor waterproof use(IP 66)

Perfect for LED fixtures

Perfect to use for LED tape/strip, modules, LED bar light, cabinet light, kitchen light, down light, panel light and other LED fixtures.



KV-DP2 DT6 Series (DALI-2)

DALI-2 & Push (2 in 1) Dimming

Constant Voltage **NFC function:** Fine-tuning output voltage and setting address Dimming: 0.1-100% Dimming

Power & Picture	Model	Output	Input	Certificate	Size	Address setting
30W  V+ ADJ	KV-12030-DP2	12V, 2.5A	100-240VAC	DALI-2、ENEC、CE、CB、RoHS、REACH	171.5*54*20mm	DALI System / NFC
	KV-24030-DP2	24V, 1.25A				
	KV-36030-DP2	36V, 0.83A				
	KV-48030-DP2	48V, 0.63A				
 V+ ADJ	KV-12030-DP2S	12V, 2.5A		DALI-2、ENEC、CE、CB、RoHS、REACH	260*30*18.5mm	DALI System / NFC
	KV-24030-DP2S	24V, 1.25A				
	KV-36030-DP2S	36V, 0.83A				
	KV-48030-DP2S	48V, 0.63A				
	KV-12030-DP2L	12V, 2.5A		DALI-2、ENEC、CE、CB、RoHS、REACH	260*32*20mm	DALI System
	KV-24030-DP2L	24V, 1.25A				
	KV-36030-DP2L	36V, 0.83A				
	KV-48030-DP2L	48V, 0.63A				
36W  V+ ADJ	KV-12036-DP2	12V, 3A	100-240VAC	DALI-2、ENEC、CE、CB、RoHS、REACH	171.5*54*20mm	DALI System / NFC
	KV-24036-DP2	24V, 1.5A				
	KV-36036-DP2	36V, 1A				
	KV-48036-DP2	48V, 0.75A				
 V+ ADJ	KV-12036-DP2S	12V, 3A		DALI-2、ENEC、CE、CB、RoHS、REACH	260*30*18.5mm	DALI System / NFC
	KV-24036-DP2S	24V, 1.5A				
	KV-36036-DP2S	36V, 1A				
	KV-48036-DP2S	48V, 0.75A				
	KV-12036-DP2L	12V, 3A		DALI-2、ENEC、CE、CB、RoHS、REACH	260*32*20mm	DALI System
	KV-24036-DP2L	24V, 1.5A				
	KV-36036-DP2L	36V, 1A				
	KV-48036-DP2L	48V, 0.75A				

NFC Voltage Level Regulation

Voltage	Lv.1	Lv.2	Lv.3	Lv.4	Lv.5	Lv.6	Lv.7	Lv.8	Lv.9	Lv.10
12V	12V	12.16V	12.32V	12.48V	12.64V	12.8V	12.96V	13.12V	13.28V	13.5V
24V	24V	24.22V	24.44V	24.66V	24.88V	25.1V	25.32V	25.54V	25.66V	26.0V
36V	36V	36.22V	36.44V	36.66V	36.88V	37.1V	37.32V	37.54V	37.66V	38.0V
48V	48V	48.22V	48.44V	48.66V	48.88V	49.1V	49.32V	49.54V	49.66V	50.0V

V+ ADJ Note: These drivers with slightly adjustable output voltage as below:
12V output voltage: 12-13.5V 24V output voltage: 24-26V 36V output voltage: 36-38V 48V output voltage: 48-50V

KV-DP2 DT6 Series (DALI-2)

DALI-2 & Push (2 in 1) Dimming

Constant Voltage **NFC function**: Fine-tuning output voltage and setting address Dimming: 0.1-100% Dimming

Power & Picture	Model	Output	Input	Certificate	Size	Address setting
60W  V+ ADJ	KV-12060-DP2	12V, 5A	100-240VAC	DALI-2、ENEC、CE、CB、RoHS、REACH	192.5*62*24mm	DALI System / NFC
	KV-24060-DP2	24V, 2.5A				
	KV-36060-DP2	36V, 1.67A				
	KV-48060-DP2	48V, 1.25A				
 V+ ADJ	KV-12060-DP2A	12V, 5A		DALI-2、ENEC、CE、CB、RoHS、REACH	200*68*22.5mm	DALI System / NFC
	KV-24060-DP2A	24V, 2.5A				
	KV-36060-DP2A	36V, 1.67A				
	KV-48060-DP2A	48V, 1.25A				
 V+ ADJ	KV-12060-DP2S	12V, 5A		DALI-2、ENEC、CE、CB、RoHS、REACH	300*30*18.5mm	DALI System / NFC
	KV-24060-DP2S	24V, 2.5A				
	KV-36060-DP2S	36V, 1.67A				
	KV-48060-DP2S	48V, 1.25A				
	KV-12060-DP2L	12V, 5A		DALI-2、ENEC、CE、CB、RoHS、REACH	300*32*20mm	DALI System
	KV-24060-DP2L	24V, 2.5A				
	KV-36060-DP2L	36V, 1.67A				
	KV-48060-DP2L	48V, 1.25A				
80W  V+ ADJ	KV-12080-DP2A	12V, 6.67A	100-240VAC	DALI-2、ENEC、CE、CB、RoHS、REACH	200*68*22.5mm	DALI System / NFC
	KV-24080-DP2A	24V, 3,34A				
	KV-36080-DP2A	36V, 2,22A				
	KV-48080-DP2A	48V, 1,67A				
90W  V+ ADJ	KV-12090-DP2	12V, 7.5A	100-240VAC	DALI-2、ENEC、CE、CB、RoHS、REACH	192.5*62*24mm	DALI System / NFC
	KV-24090-DP2	24V,3.75A				
	KV-36090-DP2	36V, 2.5A				
	KV-48090-DP2	48V, 1.86A				

NFC Voltage Level Regulation

Voltage	Lv.1	Lv.2	Lv.3	Lv.4	Lv.5	Lv.6	Lv.7	Lv.8	Lv.9	Lv.10
12V	12V	12.16V	12.32V	12.48V	12.64V	12.8V	12.96V	13.12V	13.28V	13.5V
24V	24V	24.22V	24.44V	24.66V	24.88V	25.1V	25.32V	25.54V	25.66V	26.0V
36V	36V	36.22V	36.44V	36.66V	36.88V	37.1V	37.32V	37.54V	37.66V	38.0V
48V	48V	48.22V	48.44V	48.66V	48.88V	49.1V	49.32V	49.54V	49.66V	50.0V

V+ ADJ Note: These drivers with slightly adjustable output voltage as below:
12V output voltage: 12-13.5V 24V output voltage: 24-26V 36V output voltage: 36-38V 48V output voltage: 48-50V

KV-DP2 DT6 Series (DALI-2)

DALI-2 & Push (2 in 1) Dimming

Constant Voltage NFC function: Fine-tuning output voltage and setting address Dimming: 0.1-100% Dimming

Power & Picture	Model	Output	Input	Certificate	Size	Address setting
100W  V+ ADJ	KV-12100-DP2A	12V, 8.34A	100-240VAC	DALI-2、ENEC、CE、CB、RoHS、REACH	230*78*25mm	DALI System / NFC
	KV-24100-DP2A	24V, 4.17A				
	KV-36100-DP2A	36V, 2.78A				
	KV-48100-DP2A	48V, 2.08A				
 V+ ADJ	KV-12100-DP2S	12V, 8.34A		DALI-2、ENEC、CE、CB、RoHS、REACH	330*30*22mm	DALI System / NFC
	KV-24100-DP2S	24V, 4.17A				
	KV-36100-DP2S	36V, 2.78A				
	KV-48100-DP2S	48V, 2.08A				
	KV-12100-DP2L	12V, 8.34A		DALI-2、ENEC、CE、CB、RoHS、REACH	330*32*23mm	DALI System
	KV-24100-DP2L	24V, 4.17A				
	KV-36100-DP2L	36V, 2.78A				
	KV-48100-DP2L	48V, 2.08A				
120W  V+ ADJ	KV-12120-DP2A	12V, 10A	100-240VAC	DALI-2、ENEC、CE、CB、RoHS、REACH	230*78*25mm	DALI System / NFC
	KV-24120-DP2A	24V, 5A				
	KV-36120-DP2A	36V, 3.33A				
	KV-48120-DP2A	48V, 2.5A				
150W  V+ ADJ	KV-12150-DP2A	12V, 12.5A	110-240VAC	DALI-2、ENEC、CE、CB、RoHS、REACH	279*78*25mm	DALI System / NFC
	KV-24150-DP2A	24V, 6.25A				
	KV-36150-DP2A	36V, 4.17A				
	KV-48150-DP2A	48V, 3.13A				
 V+ ADJ	KV-12150-DP2S	12V, 12.5A		DALI-2、ENEC、CE、CB、RoHS、REACH	368*30*22.5mm	DALI System / NFC
	KV-24150-DP2S	24V, 6.25A				
	KV-36150-DP2S	36V, 4.17A				
	KV-48150-DP2S	48V, 3.13A				

NFC Voltage Level Regulation

Voltage	Lv.1	Lv.2	Lv.3	Lv.4	Lv.5	Lv.6	Lv.7	Lv.8	Lv.9	Lv.10
12V	12V	12.16V	12.32V	12.48V	12.64V	12.8V	12.96V	13.12V	13.28V	13.5V
24V	24V	24.22V	24.44V	24.66V	24.88V	25.1V	25.32V	25.54V	25.66V	26.0V
36V	36V	36.22V	36.44V	36.66V	36.88V	37.1V	37.32V	37.54V	37.66V	38.0V
48V	48V	48.22V	48.44V	48.66V	48.88V	49.1V	49.32V	49.54V	49.66V	50.0V

V+ ADJ Note: These drivers with slightly adjustable output voltage as below:
12V output voltage: 12-13.5V 24V output voltage: 24-26V 36V output voltage: 36-38V 48V output voltage: 48-50V

KV-DP2 DT6 Series (DALI-2)

DALI-2 & Push (2 in 1) Dimming

Constant Voltage **NFC function**: Fine-tuning output voltage and setting address Dimming: 0.1-100% Dimming

Power & Picture	Model	Output	Input	Certificate	Size	Address setting
150W 	KV-12150-DP2L	12V, 12.5A	110-240VAC	DALI-2、ENEC、CE、CB、RoHS、REACH	368*32*23mm	DALI System
	KV-24150-DP2L	24V, 6.25A				
	KV-36150-DP2L	36V, 4.17A				
	KV-48150-DP2L	48V, 3.13A				
200W  V+ ADJ	KV-12200-DP2A	12V, 16.67A	110-240VAC	DALI-2、ENEC、CE、CB、RoHS、REACH	279*78*25mm	DALI System / NFC
	KV-24200-DP2A	24V, 8.34A				
	KV-36200-DP2A	36V, 5.56A				
	KV-48200-DP2A	48V, 4.17A				
300W  V+ ADJ	KV-12300-DP2A	12V, 25A	110-240VAC	DALI-2、ENEC、CE、CB、RoHS、REACH	301*78*25mm	DALI System / NFC
	KV-24300-DP2A	24V, 12.5A				
	KV-36300-DP2A	36V, 8.34A				
	KV-48300-DP2A	48V, 6.25A				
360W  V+ ADJ	KV-12320-DP2A	12V, 26.67A	200-240VAC	DALI-2、ENEC、CE、CB、RoHS、REACH	301*78*25mm	DALI System / NFC
	KV-24360-DP2A	24V, 15A				
	KV-36360-DP2A	36V, 10A				
	KV-48360-DP2A	48V, 7.5A				
600W  V+ ADJ	KV-12500-DP2A	12V, 41.67A	200-240VAC	ENEC Pending DALI-2、CE、RoHS	322*78*43.7mm	DALI System / NFC
	KV-24600-DP2A	24V, 25A				
	KV-36600-DP2A	36V, 16.67A				
	KV-48600-DP2A	48V, 12.5A				

NFC Voltage Level Regulation

Voltage	Lv.1	Lv.2	Lv.3	Lv.4	Lv.5	Lv.6	Lv.7	Lv.8	Lv.9	Lv.10
12V	12V	12.16V	12.32V	12.48V	12.64V	12.8V	12.96V	13.12V	13.28V	13.5V
24V	24V	24.22V	24.44V	24.66V	24.88V	25.1V	25.32V	25.54V	25.66V	26.0V
36V	36V	36.22V	36.44V	36.66V	36.88V	37.1V	37.32V	37.54V	37.66V	38.0V
48V	48V	48.22V	48.44V	48.66V	48.88V	49.1V	49.32V	49.54V	49.66V	50.0V

V+ ADJ Note: These drivers with slightly adjustable output voltage as below:
12V output voltage: 12-13.5V 24V output voltage: 24-26V 36V output voltage: 36-38V 48V output voltage: 48-50V

KI-DP2 DT6 Series (DALI-2)

DALI-2 & Push (2 in 1) Dimming

Constant Current - DIP Adjustment Dimming: 1-100% Dimming

ON OFF

Power & Picture	Model	Output	Input	Certificate	Size	Address setting
10W 	KI-010-DP2 DIP Adjustment (Multi-current)	3-42V 100mA ▼▼▼	100-240VAC	DALI-2、ENEC、CE、CB、SAA、CCC、RoHS、REACH	135*30*20mm	DALI System
		3-42V 150mA ▲▼▼				
		3-42V 200mA ▼▲▼				
		3-40V 250mA ▲▲▼				
		3-33V 300mA ▼▼▲				
		3-29V 350mA ▲▼▲				
		3-25V 400mA ▼▲▲				
		3-22V 450mA ▲▲▲				
		KI-42100-DP2A	3-42V 100mA	100-240VAC	ENEC Pending DALI-2、CE、CCC、RoHS	130*35.6*24.5mm	DALI System
		KI-42150-DP2A	3-42V 150mA				
		KI-42200-DP2A	3-42V 200mA				
		KI-40250-DP2A	3-40V 250mA				
		KI-33300-DP2A	3-33V 300mA				
		KI-29350-DP2A	3-29V 350mA				
		KI-25400-DP2A	3-25V 400mA				
		KI-22450-DP2A	3-22V 450mA				

ON OFF

Power & Picture	Model	Output	Input	Certificate	Size	Address setting
20W 	KI-020-DP2 DIP Adjustment (Multi-current)	3-42V 250mA ▲▲▲	100-240VAC	DALI-2、ENEC、CE、CB、SAA、CCC、RoHS、REACH	159.5*43*20mm	DALI System
		3-42V 350mA ▼▲▲				
		3-42V 400mA ▲▼▲				
		3-42V 450mA ▲▲▼				
		3-40V 500mA ▼▼▲				
		3-36V 550mA ▼▲▼				
		3-33V 600mA ▲▼▼				
		3-29V 700mA ▼▼▼				
		KI-42250-DP2A	3-42V 250mA	100-240VAC	ENEC Pending DALI-2、CE、CCC、RoHS	155.4*44.2*21.2mm	DALI System
		KI-42350-DP2A	3-42V 350mA				
		KI-42400-DP2A	3-42V 400mA				
		KI-42450-DP2A	3-42V 450mA				
		KI-40500-DP2A	3-40V 500mA				
		KI-36550-DP2A	3-36V 550mA				
		KI-33600-DP2A	3-33V 600mA				
		KI-29700-DP2A	3-29V 700mA				

KI-DP2 DT6 Series (DALI-2)

DALI-2 & Push (2 in 1) Dimming

Constant Current - DIP Adjustment

Dimming: 1-100% Dimming

ON OFF

Power & Picture	Model	Output	Input	Certificate	Size	Address setting
30W 	KI-030-DP2S DIP Adjustment (Multi-current)	3-65V 300mA	100-240VAC	ENEC Pending DALI-2、CE、RoHS	260*30*18.5mm	DALI System
		3-65V 350mA				
		3-65V 400mA				
		3-65V 450mA				
		3-60V 500mA				
		3-55V 550mA				
		3-50V 600mA				
		3-46V 650mA				
		3-43V 700mA				
		3-40V 750mA				
		3-38V 800mA				
		3-35V 850mA				
		3-33V 900mA				
		3-32V 950mA				
		3-30V 1000mA				
		3-29V 1050mA				
	KI-65300-DP2L	3-65V 300mA	100-240VAC	ENEC Pending DALI-2、CE、RoHS	260*32*20mm	DALI System
	KI-65350-DP2L	3-65V 350mA				
	KI-65400-DP2L	3-65V 400mA				
	KI-65450-DP2L	3-65V 450mA				
	KI-60500-DP2L	3-60V 500mA				
	KI-55550-DP2L	3-55V 550mA				
	KI-50600-DP2L	3-50V 600mA				
	KI-46650-DP2L	3-46V 650mA				
	KI-43700-DP2L	3-43V 700mA				
	KI-40750-DP2L	3-40V 750mA				
	KI-38800-DP2L	3-38V 800mA				
	KI-35850-DP2L	3-35V 850mA				
	KI-33900-DP2L	3-33V 900mA				
	KI-32950-DP2L	3-32V 950mA				
	KI-301000-DP2L	3-30V 1000mA				
	KI-291050-DP2L	3-29V 1050mA				

KI-DP2 DT6 Series (DALI-2)

DALI-2 & Push (2 in 1) Dimming

Constant Current - DIP Adjustment

Dimming: 1-100% Dimming

ON OFF

Power & Picture	Model	Output	Input	Certificate	Size	Address setting
40W 	KI-040-DP2 DIP Adjustment (Multi-current)	3-65V 300mA	100-240VAC	DALI-2、ENEC、CE、CB 、SAA、CCC、RoHS、REACH	171.5*54*20mm	DALI System
		3-65V 350mA				
		3-65V 400mA				
		3-65V 450mA				
		3-65V 500mA				
		3-65V 550mA				
		3-65V 600mA				
		3-62V 650mA				
		3-57V 700mA				
		3-50V 800mA				
		3-45V 900mA				
		3-40V 1000mA				
		3-37V 1100mA				
		3-34V 1200mA				
		3-31V 1300mA				
		3-29V 1400mA				
	KI-65300-DP2A	3-65V 300mA	100-240VAC	ENEC Pending DALI-2、CE、CCC、RoHS	166.9*61.4*24.5mm	DALI System
	KI-65350-DP2A	3-65V 350mA				
	KI-65400-DP2A	3-65V 400mA				
	KI-65450-DP2A	3-65V 450mA				
	KI-65500-DP2A	3-65V 500mA				
	KI-65550-DP2A	3-65V 550mA				
	KI-65600-DP2A	3-65V 600mA				
	KI-62650-DP2A	3-62V 650mA				
	KI-57700-DP2A	3-57V 700mA				
	KI-50800-DP2A	3-50V 800mA				
	KI-45900-DP2A	3-45V 900mA				
	KI-401000-DP2A	3-40V 1000mA				
	KI-371100-DP2A	3-37V 1100mA				
	KI-341200-DP2A	3-34V 1200mA				
	KI-311300-DP2A	3-31V 1300mA				
	KI-291400-DP2A	3-29V 1400mA				

KI-DP2 DT6 Series (DALI-2)

DALI-2 & Push (2 in 1) Dimming

Constant Current - DIP Adjustment

Dimming: 1-100% Dimming

T ON ⊥ OFF

Power & Picture	Model	Output	Input	Certificate	Size	Address setting
60W 	KI-060-DP2 DIP Adjustment (Multi-current)	3-65V 600mA ⊥⊥⊥⊥ 3-65V 700mA T⊥⊥⊥ 3-65V 800mA ⊥T⊥⊥ 3-65V 900mA TT⊥⊥ 3-60V 1000mA ⊥⊥T⊥ 3-55V 1100mA T⊥T⊥ 3-50V 1200mA ⊥TT⊥ 3-46V 1300mA TTT⊥ 3-43V 1400mA ⊥⊥⊥T 3-40V 1500mA T⊥⊥T 3-38V 1600mA ⊥T⊥T 3-35V 1700mA TT⊥T 3-33V 1800mA ⊥⊥TT 3-32V 1900mA T⊥TT 3-30V 2000mA ⊥TTT 3-29V 2100mA TTTT	100-240VAC	DALI-2、ENEC、CE、CB 、SAA、CCC、RoHS、REACH	171.5*54*20mm	DALI System
	KI-65600-DP2A	3-65V 600mA	100-240VAC	ENEC Pending DALI-2、CE、CCC、RoHS	188*61.4*24.5mm	DALI System
	KI-65700-DP2A	3-65V 700mA				
	KI-65800-DP2A	3-65V 800mA				
	KI-65900-DP2A	3-65V 900mA				
	KI-601000-DP2A	3-60V 1000mA				
	KI-551100-DP2A	3-55V 1100mA				
	KI-501200-DP2A	3-50V 1200mA				
	KI-461300-DP2A	3-46V 1300mA				
	KI-431400-DP2A	3-43V 1400mA				
	KI-401500-DP2A	3-40V 1500mA				
	KI-381600-DP2A	3-38V 1600mA				
	KI-351700-DP2A	3-35V 1700mA				
	KI-331800-DP2A	3-33V 1800mA				
	KI-321900-DP2A	3-32V 1900mA				
	KI-302000-DP2A	3-30V 2000mA				
	KI-292100-DP2A	3-29V 2100mA				

KI-DP2 DT6 Series (DALI-2)

DALI-2 & Push (2 in 1) Dimming

Constant Current - DIP Adjustment

Dimming: 1-100% Dimming

T ON ⊥ OFF

Power & Picture	Model	Output	Input	Certificate	Size	Address setting
60W 	KI-060-DP2S DIP Adjustment (Multi-current)	3-65V 600mA ⊥⊥⊥⊥ 3-65V 700mA T⊥⊥⊥ 3-65V 800mA ⊥T⊥⊥ 3-65V 900mA TT⊥⊥ 3-60V 1000mA ⊥⊥T⊥ 3-55V 1100mA T⊥T⊥ 3-50V 1200mA ⊥TT⊥ 3-46V 1300mA TTT⊥ 3-43V 1400mA ⊥⊥⊥T 3-40V 1500mA T⊥⊥T 3-38V 1600mA ⊥T⊥T 3-35V 1700mA TT⊥T 3-33V 1800mA ⊥⊥TT 3-32V 1900mA T⊥TT 3-30V 2000mA ⊥TTT 3-29V 2100mA TTTT	100-240VAC	ENEC Pending DALI-2、CE、RoHS	300*30*18.5mm	DALI System
	KI-65600-DP2L	3-65V 600mA	100-240VAC	ENEC Pending DALI-2、CE、RoHS	300*32*20mm	DALI System
	KI-65700-DP2L	3-65V 700mA				
	KI-65800-DP2L	3-65V 800mA				
	KI-65900-DP2L	3-65V 900mA				
	KI-601000-DP2L	3-60V 1000mA				
	KI-551100-DP2L	3-55V 1100mA				
	KI-501200-DP2L	3-50V 1200mA				
	KI-461300-DP2L	3-46V 1300mA				
	KI-431400-DP2L	3-43V 1400mA				
	KI-401500-DP2L	3-40V 1500mA				
	KI-381600-DP2L	3-38V 1600mA				
	KI-351700-DP2L	3-35V 1700mA				
	KI-331800-DP2L	3-33V 1800mA				
	KI-321900-DP2L	3-32V 1900mA				
	KI-302000-DP2L	3-30V 2000mA				
	KI-292100-DP2L	3-29V 2100mA				

KI-DP2 DT6 Series (DALI-2)

DALI-2 & Push (2 in 1) Dimming

Constant Current - DIP/NFC Adjustment

Dimming: 1-100% Dimming

ON OFF

Power & Picture	Model	Output	Input	Certificate	Size	Address setting
100W 	KI-100A-DP2 DIP Adjustment (Multi-current)	71-143V 500mA 71-143V 600mA 71-143V 700mA 62-125V 800mA 56-112V 900mA 50-100V 1000mA 45-91V 1100mA 42-84V 1200mA	100-240VAC	ENEC Pending DALI-2、CE、RoHS	220*70.5*26.5mm	DALI System
	KI-100B-DP2 DIP Adjustment (Multi-current)	36-72V 1400mA 33-67V 1500mA 31-63V 1600mA 29-59V 1700mA 28-56V 1800mA 26-53V 1900mA 25-50V 2000mA 24-48V 2100mA	100-240VAC	ENEC Pending DALI-2、CE、RoHS	220*70.5*26.5mm	DALI System
100W 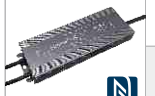	KI-100A-DP2A NFC Adjustment (Multi-current)	71-143V 500mA 71-143V 600mA 71-143V 700mA 62-125V 800mA 56-112V 900mA 50-100V 1000mA 45-91V 1100mA 42-84V 1200mA	100-240VAC	ENEC Pending DALI-2、CE、RoHS	230*78*25mm	DALI System
	KI-100B-DP2A NFC Adjustment (Multi-current)	36-72V 1400mA 33-67V 1500mA 31-63V 1600mA 29-59V 1700mA 28-56V 1800mA 26-53V 1900mA 25-50V 2000mA 24-48V 2100mA	100-240VAC	ENEC Pending DALI-2、CE、RoHS	230*78*25mm	DALI System

KI-DP2 DT6 Series (DALI-2)

DALI-2 & Push (2 in 1) Dimming

Constant Current - DIP/NFC Adjustment

Dimming: 1-100% Dimming

ON OFF

Power & Picture	Model	Output	Input	Certificate	Size	Address setting
100W 	KI-100A-DP2S DIP Adjustment (Multi-current)	71-143V 500mA 71-143V 600mA 71-143V 700mA 62-125V 800mA 56-112V 900mA 50-100V 1000mA 45-91V 1100mA 42-84V 1200mA	100-277VAC	ENEC Pending DALI-2、CE、RoHS	330*30*22mm	DALI System
	KI-100B-DP2S DIP Adjustment (Multi-current)	36-72V 1400mA 33-67V 1500mA 31-63V 1600mA 29-59V 1700mA 28-56V 1800mA 26-53V 1900mA 25-50V 2000mA 24-48V 2100mA	100-277VAC	ENEC Pending DALI-2、CE、RoHS	330*30*22mm	DALI System
100W 	KI-143500-DP2L	71-143V 500mA	100-277VAC	ENEC Pending DALI-2、CE、RoHS	330*32*23mm	DALI System
	KI-143600-DP2L	71-143V 600mA				
	KI-143700-DP2L	71-143V 700mA				
	KI-125800-DP2L	62-125V 800mA				
	KI-112900-DP2L	56-112V 900mA				
	KI-1001000-DP2L	50-100V 1000mA				
	KI-911100-DP2L	45-91V 1100mA				
	KI-841200-DP2L	42-84V 1200mA				
	KI-721400-DP2L	36-72V 1400mA	100-277VAC	ENEC Pending DALI-2、CE、RoHS	330*32*23mm	DALI System
	KI-671500-DP2L	33-67V 1500mA				
	KI-631600-DP2L	31-63V 1600mA				
	KI-591700-DP2L	29-59V 1700mA				
	KI-561800-DP2L	28-56V 1800mA				
	KI-531900-DP2L	26-53V 1900mA				
	KI-502000-DP2L	25-50V 2000mA				
	KI-482100-DP2L	24-48V 2100mA				

KV-DP2 DT8 Series (DALI-2)

DALI-2 & Push (2 in 1) Dimming

Constant Voltage **NFC function**: Fine-tuning output voltage and setting address Dimming: 0.1-100% Dimming CCT

Power & Picture	Model	Output	Input	Certificate	Size	Address setting
60W V+ ADJ	KV-12060-2C-DP2	12V, 5A	100-240VAC	DALI-2、ENEC、CE、RoHS	192.5*62*24mm	DALI System / NFC
	KV-24060-2C-DP2	24V, 2.5A				
	KV-36060-2C-DP2	36V, 1.67A				
	KV-48060-2C-DP2	48V, 1.25A				
V+ ADJ	KV-12060-2C-DP2A	12V, 5A	100-240VAC	ENEC Pending DALI-2、CE、RoHS	200*78*25mm	DALI System / NFC
	KV-24060-2C-DP2A	24V, 2.5A				
	KV-36060-2C-DP2A	36V, 1.67A				
	KV-48060-2C-DP2A	48V, 1.25A				
80W V+ ADJ	KV-12080-2C-DP2A	12V, 6.67A	100-240VAC	DALI-2、ENEC、CE、CB 、RoHS	230*78*25mm	DALI System / NFC
	KV-24080-2C-DP2A	24V, 3.33A				
	KV-36080-2C-DP2A	36V, 2.22A				
	KV-48080-2C-DP2A	48V, 1.67A				
100W V+ ADJ	KV-12100-2C-DP2A	12V, 8.34A	100-240VAC	DALI-2、ENEC、CE、CB 、RoHS	230*78*25mm	DALI System / NFC
	KV-24100-2C-DP2A	24V, 4.17A				
	KV-36100-2C-DP2A	36V, 2.78A				
	KV-48100-2C-DP2A	48V, 2.08A				
120W V+ ADJ	KV-12120-2C-DP2A	12V, 10A	100-240VAC	DALI-2、ENEC、CE、CB 、RoHS	230*78*25mm	DALI System / NFC
	KV-24120-2C-DP2A	24V, 5A				
	KV-36120-2C-DP2A	36V, 3.33A				
	KV-48120-2C-DP2A	48V, 2.5A				

NFC Voltage Level Regulation

Voltage	Lv.1	Lv.2	Lv.3	Lv.4	Lv.5	Lv.6	Lv.7	Lv.8	Lv.9	Lv.10
12V	12V	12.16V	12.32V	12.48V	12.64V	12.8V	12.96V	13.12V	13.28V	13.5V
24V	24V	24.22V	24.44V	24.66V	24.88V	25.1V	25.32V	25.54V	25.66V	26.0V
36V	36V	36.22V	36.44V	36.66V	36.88V	37.1V	37.32V	37.54V	37.66V	38.0V
48V	48V	48.22V	48.44V	48.66V	48.88V	49.1V	49.32V	49.54V	49.66V	50.0V

V+ ADJ Note: These drivers with slightly adjustable output voltage as below:
12V output voltage: 12-13.5V 24V output voltage: 24-26V 36V output voltage: 36-38V 48V output voltage: 48-50V

KV-DP2 DT8 Series (DALI-2)

DALI-2 & Push (2 in 1) Dimming

Constant Voltage **NFC function**: Fine-tuning output voltage and setting address Dimming: 0.1-100% Dimming CCT

Power & Picture	Model	Output	Input	Certificate	Size	Address setting
150W V+ ADJ	KV-12150-2C-DP2A	12V, 12.5A	110-240VAC	DALI-2、ENEC、CE、CB 、RoHS	279*78*25mm	DALI System / NFC
	KV-24150-2C-DP2A	24V, 6.25A				
	KV-36150-2C-DP2A	36V, 4.17A				
	KV-48150-2C-DP2A	48V, 3.13A				
200W V+ ADJ	KV-12200-2C-DP2A	12V, 16.67A	110-240VAC	DALI-2、ENEC、CE、CB 、RoHS	279*78*25mm	DALI System / NFC
	KV-24200-2C-DP2A	24V, 8.34A				
	KV-36200-2C-DP2A	36V, 5.56A				
	KV-48200-2C-DP2A	48V, 4.17A				
300W V+ ADJ	KV-12300-2C-DP2A	12V, 25A	110-240VAC	DALI-2、ENEC、CE、CB 、RoHS	301*78*25mm	DALI System / NFC
	KV-24300-2C-DP2A	24V, 12.5A				
	KV-36300-2C-DP2A	36V, 8.34A				
	KV-48300-2C-DP2A	48V, 6.25A				
360W V+ ADJ	KV-12320-2C-DP2A	12V, 26.67A	200-240VAC	ENEC Pending DALI-2、CE、CB 、RoHS	322*78*43.7mm	DALI System / NFC
	KV-24360-2C-DP2A	24V, 15A				
	KV-36360-2C-DP2A	36V, 10A				
	KV-48360-2C-DP2A	48V, 7.5A				
600W V+ ADJ	KV-12480-2C-DP2A	12V, 40A	200-240VAC	ENEC Pending DALI-2、CE、CB 、RoHS	322*78*43.7mm	DALI System / NFC
	KV-24600-2C-DP2A	24V, 25A				
	KV-36600-2C-DP2A	36V, 16.67A				
	KV-48600-2C-DP2A	48V, 12.5A				

NFC Voltage Level Regulation

Voltage	Lv.1	Lv.2	Lv.3	Lv.4	Lv.5	Lv.6	Lv.7	Lv.8	Lv.9	Lv.10
12V	12V	12.16V	12.32V	12.48V	12.64V	12.8V	12.96V	13.12V	13.28V	13.5V
24V	24V	24.22V	24.44V	24.66V	24.88V	25.1V	25.32V	25.54V	25.66V	26.0V
36V	36V	36.22V	36.44V	36.66V	36.88V	37.1V	37.32V	37.54V	37.66V	38.0V
48V	48V	48.22V	48.44V	48.66V	48.88V	49.1V	49.32V	49.54V	49.66V	50.0V

V+ ADJ Note: These drivers with slightly adjustable output voltage as below:
12V output voltage: 12-13.5V 24V output voltage: 24-26V 36V output voltage: 36-38V 48V output voltage: 48-50V

KI-DP2 DT8 Series (DALI-2)

DALI-2 & Push (2 in 1) Dimming

Constant Current - DIP Adjustment Dimming: 1-100% Dimming CCT

T ON ⊥ OFF

Power & Picture		Model	Output	Input	Certificate	Size	Address setting
20W		KI-020-2C-DP2 DIP Adjustment (Multi-current)	3-42V 250mA ⊥⊥⊥ 3-42V 350mA T⊥⊥ 3-42V 400mA ⊥T⊥ 3-42V 450mA TT⊥ 3-40V 500mA ⊥⊥T 3-36V 550mA T⊥T 3-33V 600mA ⊥TT 3-29V 700mA TTT	100-240VAC	ENEC Pending DALI-2、CE、RoHS	159.5*43*20mm	DALI System
40W		KI-040-2C-DP2 DIP Adjustment (Multi-current)	6-42V 500mA ⊥⊥⊥⊥ 6-42V 550mA T⊥⊥⊥ 6-42V 600mA ⊥T⊥⊥ 6-42V 650mA TT⊥⊥ 6-42V 700mA ⊥⊥T⊥ 6-42V 750mA T⊥T⊥ 6-42V 800mA ⊥TT⊥ 6-42V 850mA TTT⊥ 6-42V 900mA ⊥⊥⊥T 6-45V 950mA T⊥⊥T 6-45V 1000mA ⊥T⊥T 6-45V 1050mA TT⊥T 6-44V 1100mA ⊥⊥TT 6-40V 1150mA T⊥TT 6-36V 1200mA ⊥TTT 6-33V 1200mA TTTT	100-240VAC	ENEC Pending DALI-2、CE、RoHS	171.5*54*20mm	DALI System

KI-DP2 DT8 Series (DALI-2)

DALI-2 & Push (2 in 1) Dimming

Constant Current - DIP Adjustment Dimming: 1-100% Dimming CCT

T ON ⊥ OFF

Power & Picture		Model	Output	Input	Certificate	Size	Address setting
60W		KI-060-2C-DP2 DIP Adjustment (Multi-current)	6-42V 800mA ⊥⊥⊥⊥ 6-42V 850mA T⊥⊥⊥ 6-42V 900mA ⊥T⊥⊥ 6-42V 950mA TT⊥⊥ 6-42V 1000mA ⊥⊥T⊥ 6-42V 1100mA T⊥T⊥ 6-42V 1200mA ⊥TT⊥ 6-42V 1300mA TTT⊥ 6-42V 1400mA ⊥⊥⊥T 6-40V 1500mA T⊥⊥T 6-38V 1600mA ⊥T⊥T 6-35V 1700mA TT⊥T 6-33V 1800mA ⊥⊥TT 6-32V 1900mA T⊥TT 6-30V 2000mA ⊥TTT 6-29V 2100mA TTTT	100-240VAC	ENEC Pending DALI-2、CE、RoHS	192.5*62*24mm	DALI System

KV-DA2 DT8 RGBCW Series (DALI-2)

DALI-2 Dimming NFC function: Fine-tuning output voltage and setting address KV-12080-xC-DA2 (x=3,4,5 CH) Different channels for choice: 3CH: RGB Dimming; 4CH: RGBW Dimming; 5CH: RGBCW Dimming

Constant Voltage Dimming: 0.1-100% — Dimming, CCT, RGB RGBW RGBCW

Power & Picture	Model	Output	Input	Certificate	Size	Address setting
80W  V+ ADJ (x= 3,4,5 CH)	KV-12080-xC-DA2A	12V, 6.67A	100-240VAC	ENEC Pending DALI-2、CE、RoHS	230*78*25mm	DALI System / NFC
	KV-24080-xC-DA2A	24V, 3.33A				
	KV-36080-xC-DA2A	36V, 2.22A				
	KV-48080-xC-DA2A	48V, 1.67A				
100W  V+ ADJ (x= 3,4,5 CH)	KV-12100-xC-DA2A	12V, 8.34A	100-240VAC	ENEC Pending DALI-2、CE、RoHS	230*78*25mm	DALI System / NFC
	KV-24100-xC-DA2A	24V, 4.17A				
	KV-36100-xC-DA2A	36V, 2.78A				
	KV-48100-xC-DA2A	48V, 2.08A				
120W  V+ ADJ (x= 3,4,5 CH)	KV-12120-xC-DA2A	12V, 10A	100-240VAC	ENEC Pending DALI-2、CE、RoHS	230*78*25mm	DALI System / NFC
	KV-24120-xC-DA2A	24V, 5A				
	KV-36120-xC-DA2A	36V, 3.33A				
	KV-48120-xC-DA2A	48V, 2.5A				
150W  V+ ADJ (x= 3,4,5 CH)	KV-12150-xC-DA2A	12V, 12.5A	110-240VAC	ENEC Pending DALI-2、CE、RoHS	277*78*25mm	DALI System / NFC
	KV-24150-xC-DA2A	24V, 6.25A				
	KV-36150-xC-DA2A	36V, 4.17A				
	KV-48150-xC-DA2A	48V, 3.13A				
200W  V+ ADJ (x= 3,4,5 CH)	KV-12200-xC-DA2A	12V, 16.67A	110-240VAC	ENEC Pending DALI-2、CE、RoHS	277*78*25mm	DALI System / NFC
	KV-24200-xC-DA2A	24V, 8.34A				
	KV-36200-xC-DA2A	36V, 5.56A				
	KV-48200-xC-DA2A	48V, 4.17A				
300W  V+ ADJ (x= 3,4,5 CH)	KV-12300-xC-DA2A	12V, 25A	110-240VAC	ENEC Pending DALI-2、CE、RoHS	301*78*25mm	DALI System / NFC
	KV-24300-xC-DA2A	24V, 12.5A				
	KV-36300-xC-DA2A	36V, 8,33A				
	KV-48300-xC-DA2A	48V, 6.25A				
600W  V+ ADJ (x= 3,4,5 CH)	KV-12480-xC-DA2A	12V, 40A	200-240VAC	ENEC Pending DALI-2、CE、RoHS	322*78*43.7mm	DALI System / NFC
	KV-24600-xC-DA2A	24V, 25A				
	KV-36600-xC-DA2A	36V, 16,67A				
	KV-48600-xC-DA2A	48V, 12.5A				

NFC Voltage Level Regulation

Voltage	Lv.1	Lv.2	Lv.3	Lv.4	Lv.5	Lv.6	Lv.7	Lv.8	Lv.9	Lv.10
12V	12V	12.16V	12.32V	12.48V	12.64V	12.8V	12.96V	13.12V	13.28V	13.5V
24V	24V	24.22V	24.44V	24.66V	24.88V	25.1V	25.32V	25.54V	25.66V	26.0V
36V	36V	36.22V	36.44V	36.66V	36.88V	37.1V	37.32V	37.54V	37.66V	38.0V
48V	48V	48.22V	48.44V	48.66V	48.88V	49.1V	49.32V	49.54V	49.66V	50.0V

V+ ADJ Note: These drivers with slightly adjustable output voltage as below:
12V output voltage: 12-13.5V 24V output voltage: 24-26V 36V output voltage: 36-38V 48V output voltage: 48-50V

KI-DA2 D4i Series (DALI-2)

DALI-2 Dimming

Constant Current - NFC Adjustment Dimming: 1-100% — Dimming

Power & Picture	Model	Output	Input	Address setting	Certificate	IP
30W 	KI-030-D4iL NFC Adjustment (Multi-current)	15-54V 100mA	100-277VAC	DALI System/ NFC	DALI-2、ENEC、CE、RoHS Pending D4i	IP20 with terminals
		15-54V 200mA				
		15-54V 300mA				
		15-54V 400mA				
		15-54V 500mA				
		15-50V 1600mA				
		15-43V 700mA				
		15-38V 800mA				
		15-33V 900mA				
		15-30V 1000mA				
60W 	KI-060-D4iL NFC Adjustment (Multi-current)	15-54V 600mA	100-277VAC	DALI System/ NFC	DALI-2、ENEC、CE、RoHS Pending D4i	IP20 with terminals
		15-54V 700mA				
		15-54V 800mA				
		15-54V 900mA				
		15-54V 1000mA				
		15-54V 1100mA				
		15-50V 1200mA				
		15-46V 1300mA				
		15-43V 1400mA				
		15-40V 2500mA				

KI-DA2 D4i Series (DALI-2)

DALI-2 Dimming

Constant Current - NFC Adjustment Dimming: 1-100% Dimming

Power & Picture	Model	Output	Input	Address setting	Certificate	IP
100W 	KI-100A-D4iL NFC Adjustment (Multi-current)	20-75V 700mA	100-277VAC	DALI System/ NFC	DALI-2、ENEC、CE、RoHS Pending D4i	IP20 with terminals
		20-75V 800mA				
		20-75V 900mA				
		20-75V 1000mA				
		20-75V 1100mA				
		20-75V 1200mA				
		20-75V 1300mA				
		20-71V 1400mA				
		20-67V 1500mA				
		20-63V 1600mA				
	KI-100B-D4iL NFC Adjustment (Multi-current)	15-54V 1200mA	100-277VAC	DALI System/ NFC	DALI-2、ENEC、CE、RoHS Pending D4i	IP20 with terminals
		15-54V 1300mA				
		15-54V 1400mA				
		15-54V 1500mA				
		15-54V 1600mA				
		15-54V 1700mA				
		15-54V 1800mA				
		15-53V 1900mA				
		15-50V 2000mA				
		15-48V 2100mA				

KI-DA2 D4i Series (DALI-2)

DALI-2 Dimming

Constant Current - NFC Adjustment Dimming: 1-100% Dimming

Power & Picture	Model	Output	Input	Address setting	Certificate	IP
100W 	KI-100A-D4iA NFC Adjustment (Multi-current)	118-235V 250mA	100-277VAC	DALI System/ NFC	DALI-2、ENEC、CE、RoHS Pending D4i	IP67
		118-235V 300mA				
		118-235V 350mA				
		118-235V 400mA				
		110-222V 450mA				
		100-200V 500mA				
		91-182V 550mA				
		84-167V 600mA				
		77-154V 650mA				
		72-143V 700mA				
	KI-100B-D4iA NFC Adjustment (Multi-current)	59-118V 750mA	100-277VAC	DALI System/ NFC	DALI-2、ENEC、CE、RoHS Pending D4i	IP67
		59-118V 800mA				
		59-118V 850mA				
		55-111V 900mA				
		52-105V 950mA				
		50-100V 1000mA				
		47-95V 1050mA				
		45-91V 1100mA				
		44-87V 1150mA				
		42-84V 1200mA				
	KI-100C-D4iA NFC Adjustment (Multi-current)	35-71V 1200mA	100-277VAC	DALI System/ NFC	DALI-2、ENEC、CE、RoHS Pending D4i	IP67
		35-71V 1300mA				
		35-71V 1400mA				
		33-67V 1500mA				
		30-63V 1600mA				
		28-59V 1700mA				
		27-56V 1800mA				
		26-53V 1900mA				
		25-50V 2000mA				
		24-48V 2100mA				

KI-DA2 D4i Series (DALI-2)

DALI-2 Dimming

Constant Current - NFC Adjustment Dimming: 1-100% Dimming

Power & Picture	Model	Output	Input	Address setting	Certificate	IP
200W 	KI-200A-D4iA NFC Adjustment (Multi-current)	117-235V 600mA	100-277VAC	DALI System/ NFC	DALI-2、ENEC、CE、RoHS Pending D4i	IP67
		117-235V 650mA				
		117-235V 700mA				
		117-235V 750mA				
		117-235V 800mA				
		117-235V 850mA				
		111-222V 900mA				
		105-210V 950mA				
		100-200V 1000mA				
		95-190V 1050mA				
	KI-200B-D4iA NFC Adjustment (Multi-current)	95-190V 950mA	100-277VAC	DALI System/ NFC	DALI-2、ENEC、CE、RoHS Pending D4i	IP67
		95-190V 1000mA				
		95-190V 1050mA				
		91-182V 1100mA				
		87-174V 1150mA				
		83-167V 1200mA				
		80-160V 1250mA				
		77-154V 1300mA				
		74-148V 1350mA				
		71-143V 1400mA				

KI-DA2 D4i Series (DALI-2)

DALI-2 Dimming

Constant Current - NFC Adjustment Dimming: 1-100% Dimming

Power & Picture	Model	Output	Input	Address setting	Certificate	IP
200W 	KI-200C-D4iA NFC Adjustment (Multi-current)	71-143V 1200mA	100-277VAC	DALI System/ NFC	DALI-2、ENEC、CE、RoHS Pending D4i	IP67
		71-143V 1300mA				
		71-143V 1400mA				
		66-133V 1500mA				
		62-125V 1600mA				
		59-118V 1700mA				
		55-111V 1800mA				
		52-105V 1900mA				
		50-100V 2000mA				
		48-96V 2100mA				
	KI-200D-D4iA NFC Adjustment (Multi-current)	48-92V 1900mA	100-277VAC	DALI System/ NFC	DALI-2、ENEC、CE、RoHS Pending D4i	IP67
		48-92V 2000mA				
		48-92V 2100mA				
		46-92V 2200mA				
		44-88V 2300mA				
		42-84V 2400mA				
		40-80V 2500mA				
		29-78V 2600mA				
		37-74V 2700mA				
		36-72V 2800mA				

KI-DA2 D4i Series (DALI-2)

DALI-2 Dimming

Constant Current - NFC Adjustment Dimming: 1-100% Dimming

Power & Picture	Model	Output	Input	Address setting	Certificate	IP
320W 	KI-320A-D4iA NFC Adjustment (Multi-current)	189-377V 750mA	100-277VAC	DALI System/ NFC	DALI-2、ENEC、CE、RoHS Pending D4i	IP67
		189-377V 800mA				
		189-377V 850mA				
		178-356V 900mA				
		169-337V 950mA				
		160-320V 1000mA				
		153-305V 1050mA				
		145-290V 1100mA				
		139-278V 1150mA				
		134-267V 1200mA				
	KI-320B-D4iA NFC Adjustment (Multi-current)	114-228V 1300mA	100-277VAC	DALI System/ NFC	DALI-2、ENEC、CE、RoHS Pending D4i	IP67
		114-228V 1400mA				
		107-213V 1500mA				
		100-200V 1600mA				
		94-188V 1700mA				
		89-178V 1800mA				
		84-168V 1900mA				
		80-160V 2000mA				
		76-152V 2100mA				
		73-145V 2200mA				
	KI-320C-D4iA NFC Adjustment (Multi-current)	50-100V 2300mA	100-277VAC	DALI System/ NFC	DALI-2、ENEC、CE、RoHS Pending D4i	IP67
		52-103V 2400mA				
		54-107V 2500mA				
		57-114V 2600mA				
		59-118V 2700mA				
		59-118V 2800mA				
		55-111V 2900mA				
		52-105V 3000mA				
		50-100V 3100mA				
		48-96V 3200mA				

KI-DA2 D4i Series (DALI-2)

DALI-2 Dimming

Constant Current - NFC Adjustment Dimming: 1-100% Dimming

Power & Picture	Model	Output	Input	Address setting	Certificate	IP
320W 	KI-320D-D4iA NFC Adjustment (Multi-current)	46-92V 3300mA	100-277VAC	DALI System/ NFC	DALI-2、ENEC、CE、RoHS Pending D4i	IP67
		46-92V 3500mA				
		43-86V 3700mA				
		41-82V 3900mA				
		39-78V 4100mA				
		37-74V 4300mA				
		36-71V 4500mA				
		34-68V 4700mA				
		33-65V 4900mA				
		32-63V 5100mA				
	KI-320E-D4iA NFC Adjustment (Multi-current)	30-60V 5200mA	100-277VAC	DALI System/ NFC	DALI-2、ENEC、CE、RoHS Pending D4i	IP67
		30-60V 5400mA				
		29-57V 5600mA				
		28-55V 5800mA				
		27-53V 6000mA				
		26-52V 6200mA				
		25-50V 6400mA				
		24-48V 6600mA				
		24-47V 6800mA				
		23-46V 7000mA				

KI-DA2 D4i Series (DALI-2)

DALI-2 Dimming

Constant Current - NFC Adjustment Dimming: 1-100% Dimming

Power & Picture	Model	Output	Input	Address setting	Certificate	IP
480W 	KI-480A-D4iA NFC Adjustment (Multi-current)	240-480V 950mA	100-277VAC	DALI System/ NFC	DALI-2、ENEC、CE、RoHS Pending D4i	IP67
		240-480V 1000mA				
		229-457V 1050mA				
		218-436V 1100mA				
		209-417V 1150mA				
		200-400V 1200mA				
		192-384V 1250mA				
		185-369V 1300mA				
		178-356V 1350mA				
		171-343V 1400mA				
	KI-480B-D4iA NFC Adjustment (Multi-current)	150-300V 1500mA	100-277VAC	DALI System/ NFC	DALI-2、ENEC、CE、RoHS Pending D4i	IP67
		150-300V 1600mA				
		141-282V 1700mA				
		133-267V 1800mA				
		126-253V 1900mA				
		120-240V 2000mA				
		114-229V 2100mA				
		109-218V 2200mA				
		104-209V 2300mA				
		100-200V 2400mA				
	KI-480C-D4iA NFC Adjustment (Multi-current)	86-171V 2600mA	100-277VAC	DALI System/ NFC	DALI-2、ENEC、CE、RoHS Pending D4i	IP67
		86-171V 2800mA				
		80-160V 3000mA				
		75-150V 3200mA				
		71-141V 3400mA				
		67-133V 3600mA				
		63-126V 3800mA				
		60-120V 4000mA				
		57-114V 4200mA				
		55-109V 4400mA				

KI-DA2 D4i Series (DALI-2)

DALI-2 Dimming

Constant Current - NFC Adjustment Dimming: 1-100% Dimming

Power & Picture	Model	Output	Input	Address setting	Certificate	IP
480W 	KI-480D-D4iA NFC Adjustment (Multi-current)	50-100V 4600mA	100-277VAC	DALI System/ NFC	DALI-2、ENEC、CE、RoHS Pending D4i	IP67
		50-100V 4800mA				
		48-96V 5000mA				
		46-92V 5200mA				
		44-89V 5400mA				
		43-86V 5600mA				
		41-83V 5800mA				
		40-80V 6000mA				
		39-77V 6200mA				
		38-75V 6400mA				
	KI-480E-D4iA NFC Adjustment (Multi-current)	36-71V 6600mA	100-277VAC	DALI System/ NFC	DALI-2、ENEC、CE、RoHS Pending D4i	IP67
		35-71V 6800mA				
		34-69V 7000mA				
		33-67V 7200mA				
		32-65V 7400mA				
		32-63V 7600mA				
		31-62V 7800mA				
		30-60V 8000mA				
		29-59V 8200mA				
		29-57V 8400mA				

KI-DA2 D4i Series (DALI-2)

DALI-2 Dimming

Constant Current - NFC Adjustment Dimming: 1-100% Dimming

Power & Picture	Model	Output	Input	Address setting	Certificate	IP
720W 	KI-720A-D4iA NFC Adjustment (Multi-current)	212-423V 1500mA	100-277VAC	DALI System/ NFC	DALI-2、ENEC、CE、RoHS Pending D4i	IP67
		212-423V 1600mA				
		212-423V 1700mA				
		200-400V 1800mA				
		190-379V 1900mA				
		180-360V 2000mA				
		172-343V 2100mA				
		164-327V 2200mA				
		157-313V 2300mA				
		150-300V 2400mA				
	KI-720B-D4iA NFC Adjustment (Multi-current)	120-240V 2600mA	100-277VAC	DALI System/ NFC	DALI-2、ENEC、CE、RoHS Pending D4i	IP67
		120-240V 2800mA				
		120-240V 3000mA				
		113-225V 3200mA				
		106-212V 3400mA				
		100-200V 3600mA				
		95-190V 3800mA				
		90-180V 4000mA				
		86-171V 4200mA				
		82-164V 4400mA				
	KI-720C-D4iA NFC Adjustment (Multi-current)	75-150V 4600mA	100-277VAC	DALI System/ NFC	DALI-2、ENEC、CE、RoHS Pending D4i	IP67
		75-150V 4800mA				
		72-144V 5000mA				
		69-138V 5200mA				
		67-133V 5400mA				
		64-128V 5600mA				
		62-124V 5800mA				
		60-120V 6000mA				
		58-116V 6200mA				
		56-112V 6400mA				

KI-DA2 D4i Series (DALI-2)

DALI-2 Dimming

Constant Current - NFC Adjustment Dimming: 1-100% Dimming

Power & Picture	Model	Output	Input	Address setting	Certificate	IP
720W 	KI-720D-D4iA NFC Adjustment (Multi-current)	53-106V 6600mA	100-277VAC	DALI System/ NFC	DALI-2、ENEC、CE、RoHS Pending D4i	IP67
		53-106V 6800mA				
		52-103V 7000mA				
		50-100V 7200mA				
		49-97V 7400mA				
		48-95V 7600mA				
		46-92V 7800mA				
		45-90V 8000mA				
		44-88V 8200mA				
		43-86V 8400mA				
	KI-720E-D4iA NFC Adjustment (Multi-current)	40-80V 8700mA	100-277VAC	DALI System/ NFC	DALI-2、ENEC、CE、RoHS Pending D4i	IP67
		40-80V 9000mA				
		39-78V 9300mA				
		38-75V 9600mA				
		37-73V 9900mA				
		36-71V 10200mA				
		35-69V 10500mA				
		34-67V 108000mA				
		23-65V 11100mA				
		22-63V 11400mA				

DALI Relay

Picture	Model	Output	Input	Size	N.W.
	DA-RLY	250VAC, 16A	100-265VAC 50/60 HZ	87.5*36.5*59mm	120g

DALI &0-10V & Push (3 in 1) decoder

ON OFF

Picture	Model	Dim Way	Output	Input	Size	Certificate
	DDP-P-12V-24V	DALI	12-24V,12A	12-24V	102*44*27mm	CE、DALI
		PUSH				
		0-10V				
		1-10V				

PART 5

DMX512 dimmable LED Driver

IP20 & IP66

(For DW/TW/RGB/RGBW/RGBTW LED light)





A shell: 30W-360W

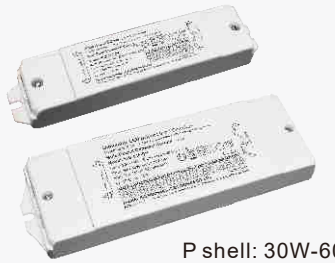

P shell: 30W-60W

Wiring diagram

Diagram - 5 CH RGBTW

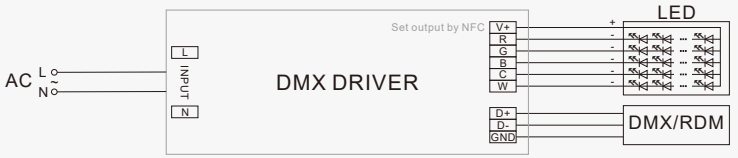

Diagram - 4 CH RGBW

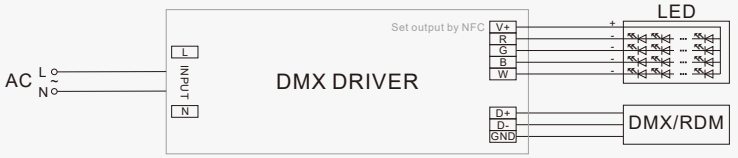

Diagram - 3 CH RGB

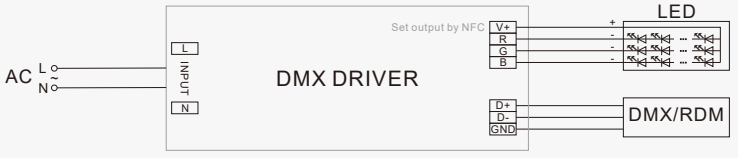

Diagram - 2 CH CCT

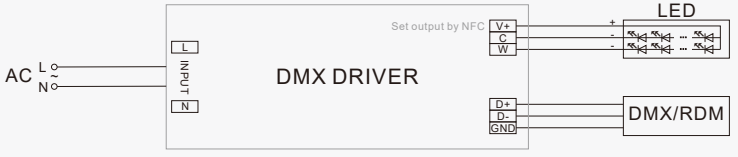

Diagram - 1 CH Dimming

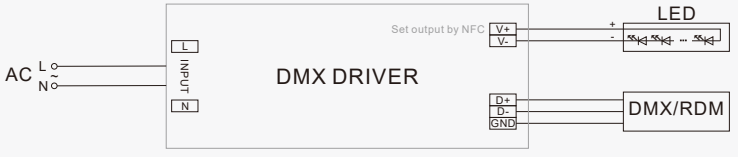

DMX512 Dimmable LED Driver Series

IP20 & IP66

Overview

Shengchang DMX dimmable LED driver including 30-300W with 1-5 channels (Constant voltage version), and 10-40W with 1-2 channels (Constant current version). The NFC function is adopted to set address and fine tunn the output voltage by APP or Handheld device. And the address can be set by RDM as well.

This series based on DMX 512 protocal , should be provided with RDM/NFC function. The Remote Device Management Protocol(RDM), It can realize the function of remotely assigning addresses, reading device information, devices recognition, and personalizing devices.

The Near Field Communication(NFC) base on NFC wireless transmission protocol, it can set the DMX address for the power supply and adjust the output voltage or current of the power supply without power on.

The RDM and NFC functions eliminate unnecessary holes in the power supply and increase the waterproof performance of the power supply.

Outstanding Performance

- 1- 5 channel for choice
  Dimming/CW/RGB/RGBW/RGBCW
- With RDM remote device management protocol
- Continuous & Smooth & Stable
- Full dimming range: 0.1-100%
- Dimming CCT RGB RGBW RGBCW
- Flicker-free 4K Hz
- 5 years warranty
- NFC function
  CV-Setting address
  Fine-tuning of output voltage
  CC-Setting address
- RDM function
  CV&CC-Setting address



Different versions

A shell



Aluminum shell, Waterproof IP66
Constant voltage
80W-300W items

P shell



Plastic shell, IP20
Constant voltage
30W-60W items
Constant current
10W-60W items

KVX Series

DMX512 Dimming **NFC function**: Fine-tuning output voltage and setting address
Constant Voltage Dimming: 0.1-100% Dimming CCT RGB RGBW RGBCW

KVX-12030-xC-y
x=1,2,3,4,5 CH
Different channels for choice
1CH: Dimming
2CH: CCT Dimming
3CH: RGB Dimming
4CH: RGBW Dimming
5CH: RGBCW Dimming
y=A, P (shell)
Different shells for choice

Power & Picture		Model	Output	Input	Certificate	Size	Address setting
30W	 V+ ADJ (x=1,2 CH)	KVX-12030-xC-P	12V, 2.5A/xCH	100-277VAC	ENEC Pending、CE、RoHS、REACH	171.5*54*20mm	RDM / NFC
		KVX-24030-xC-P	24V, 1.25A/xCH				
		KVX-36030-xC-P	36V, 0.83A/xCH				
		KVX-48030-xC-P	48V, 0.63A/xCH				
60W	 V+ ADJ (x=1,2 CH)	KVX-12060-xC-P	12V, 5A/xCH	100-277VAC	ENEC Pending、CE、RoHS、REACH	192.5*62*24mm	RDM / NFC
		KVX-24060-xC-P	24V, 2.5A/xCH				
		KVX-36060-xC-P	36V, 1.67A/xCH				
		KVX-48060-xC-P	48V, 1.25A/xCH				
80W	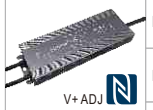 V+ ADJ (x=1,2,3,4,5 CH)	KVX-12080-xC-A	12V, 6.67A/xCH	100-277VAC	ENEC Pending、CE、RoHS、UL、REACH	135*30*20mm	RDM / NFC
		KVX-24080-xC-A	24V, 3.34A/xCH				
		KVX-36080-xC-A	36V, 2.23A/xCH				
		KVX-48080-xC-A	48V, 1.67A/xCH				
100W	 V+ ADJ (x=1,2,3,4,5 CH)	KVX-12100-xC-A	12V, 8.34A/xCH	100-277VAC	ENEC Pending、CE、RoHS、UL、REACH	230*78*25mm	RDM / NFC
		KVX-24100-xC-A	24V, 4.17A/xCH				
		KVX-36100-xC-A	36V, 2.78A/xCH				
		KVX-48100-xC-A	48V, 2.08A/xCH				

NFC Voltage Level Regulation

Voltage	Lv.1	Lv.2	Lv.3	Lv.4	Lv.5	Lv.6	Lv.7	Lv.8	Lv.9	Lv.10
12V	12V	12.16V	12.32V	12.48V	12.64V	12.8V	12.96V	13.12V	13.28V	13.5V
24V	24V	24.22V	24.44V	24.66V	24.88V	25.1V	25.32V	25.54V	25.66V	26.0V
36V	36V	36.22V	36.44V	36.66V	36.88V	37.1V	37.32V	37.54V	37.66V	38.0V
48V	48V	48.22V	48.44V	48.66V	48.88V	49.1V	49.32V	49.54V	49.66V	50.0V

V+ ADJ Note: These drivers with slightly adjustable output voltage as below:
12V output voltage: 12-13.5V 24V output voltage: 24-26V 36V output voltage: 36-38V 48V output voltage: 48-50V

KVX Series

DMX512 Dimming **NFC function**: Fine-tuning output voltage and setting address

Constant Voltage Dimming: 0.1-100% Dimming CCT RGB RGBW RGBCW

KVX-12030-xC-y
- x=1,2,3,4,5 CH: Different channels for choice
  - 1CH: Dimming
  - 2CH: CCT Dimming
  - 3CH: RGB Dimming
  - 4CH: RGBW Dimming
  - 5CH: RGBCW Dimming
- y=A, P (shell): Different shells for choice

Power & Picture	Model	Output	Input	Certificate	Size	Address setting
120W  V+ ADJ (x=1,2,3,4,5 CH)	KVX-12120-xC-A	12V, 10A/xCH	100-277VAC	ENEC Pending、CE、RoHS、UL、REACH	230*78*25mm	RDM / NFC
	KVX-24120-xC-A	24V, 5A/xCH				
	KVX-36120-xC-A	36V, 3.33A/xCH				
	KVX-48120-xC-A	48V, 2.5A/xCH				
150W 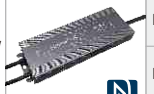 V+ ADJ (x=1,2,3,4,5 CH)	KVX-12150-xC-A	12V, 12.5A/xCH	110-277VAC	ENEC Pending、CE、RoHS、REACH	279*78*25mm	RDM / NFC
	KVX-24150-xC-A	24V, 6.25A/xCH				
	KVX-36150-xC-A	36V, 4.17A/xCH				
	KVX-48150-xC-A	48V, 3.13A/xCH				
200W 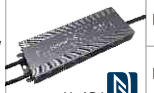 V+ ADJ (x=1,2,3,4,5 CH)	KVX-12200-xC-A	12V, 16.67A/xCH	110-277VAC	ENEC Pending、CE、RoHS、REACH	279*78*25mm	RDM / NFC
	KVX-24200-xC-A	24V, 8.34A/xCH				
	KVX-36200-xC-A	36V, 5.56A/xCH				
	KVX-48200-xC-A	48V, 4.17A/xCH				
300W 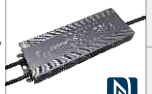 V+ ADJ (x=1,2,3,4,5 CH)	KVX-12300-xC-A	12V, 25A/xCH	110-277VAC	ENEC Pending、CE、RoHS、REACH	301*78*25mm	RDM / NFC
	KVX-24300-xC-A	24V, 12.5A/xCH				
	KVX-36300-xC-A	36V, 8.34A/xCH				
	KVX-48300-xC-A	48V, 6.25A/xCH				

NFC Voltage Level Regulation

Voltage	Lv.1	Lv.2	Lv.3	Lv.4	Lv.5	Lv.6	Lv.7	Lv.8	Lv.9	Lv.10
12V	12V	12.16V	12.32V	12.48V	12.64V	12.8V	12.96V	13.12V	13.28V	13.5V
24V	24V	24.22V	24.44V	24.66V	24.88V	25.1V	25.32V	25.54V	25.66V	26.0V
36V	36V	36.22V	36.44V	36.66V	36.88V	37.1V	37.32V	37.54V	37.66V	38.0V
48V	48V	48.22V	48.44V	48.66V	48.88V	49.1V	49.32V	49.54V	49.66V	50.0V

V+ ADJ Note: These drivers with slightly adjustable output voltage as below:
12V output voltage: 12-13.5V 24V output voltage: 24-26V 36V output voltage: 36-38V 48V output voltage: 48-50V

KIX Series

DMX512 Dimming

Constant Current - NFC Adjustment Dimming: 1-100% Dimming CCT

KIX-010-xC-y
- x=1,2 CH: Different channels for choice
  - 1CH: Dimming
  - 2CH: CW Dimming
- y=A, P (shell): Different shells for choice

ON OFF

Power & Picture	Model	Output	Input	Certificate	Size	Address setting
10W 	KIX-010-1C NFC Adjustment (Multi-current)	3-42V 100mA ⊤⊤⊤	100-277VAC	ENEC Pending、CE、RoHS、REACH	135*30*20mm	RDM/NFC
		3-42V 150mA ⊥⊤⊤				
		3-42V 200mA ⊤⊥⊤				
		3-40V 250mA ⊥⊥⊤				
		3-33V 300mA ⊤⊤⊥				
		3-29V 350mA ⊥⊤⊥				
		3-25V 450mA ⊤⊥⊥				
		3-22V 450mA ⊥⊥⊥				

ON OFF

Power & Picture	Model	Output	Input	Certificate	Size	Address setting
20W  (x=1,2 CH)	KIX-020-xC NFC Adjustment (Multi-current)	3-42V 250mA ⊥⊥⊥	100-277VAC	ENEC Pending、CE、RoHS、REACH	159.5*43*20mm	RDM/NFC
		3-42V 350mA ⊤⊥⊥				
		3-42V 400mA ⊥⊤⊥				
		3-42V 450mA ⊥⊥⊤				
		3-40V 500mA ⊤⊤⊥				
		3-36V 550mA ⊤⊥⊤				
		3-33V 600mA ⊥⊤⊤				
		3-29V 700mA ⊤⊤⊤				

KIX Series

DMX512 Dimming

Constant Current - NFC Adjustment

Dimming: 1-100% Dimming CCT

ON OFF

Power & Picture		Model	Output	Input	Certificate	Size	Address setting
40W		KIX-040-1C NFC Adjustment (Multi-current)	3-65V 300mA 3-65V 350mA 3-65V 400mA 3-65V 450mA 3-65V 500mA 3-65V 550mA 3-65V 600mA 3-62V 650mA 3-57V 700mA 3-50V 800mA 3-45V 900mA 3-40V 1000mA 3-37V 1100mA 3-34V 1200mA 3-31V 1300mA 3-29V 1400mA	100-277VAC	ENEC Pending、CE、RoHS、REACH	171.5*54*20mm	RDM/NFC
		KIX-040-2C NFC Adjustment (Multi-current)	3-42V 250mA*2 3-42V 350mA*2 3-42V 400mA*2 3-42V 450mA*2 3-40V 500mA*2 3-36V 550mA*2 3-33V 600mA*2 3-29V 700mA*2	100-277VAC	ENEC Pending、CE、RoHS、REACH	171.5*54*20mm	RDM/NFC

KIX Series

DMX512 Dimming

Constant Current - NFC Adjustment

Dimming: 1-100% Dimming CCT

ON OFF

Power & Picture		Model	Output	Input	Certificate	Size	Address setting
60W	 (x=1,2 CH)	KIX-060-xC NFC Adjustment (Multi-current)	3-65V 600mA 3-65V 700mA 3-65V 800mA 3-65V 900mA 3-60V 1000mA 3-55V 1100mA 3-50V 1200mA 3-46V 1300mA 3-43V 1400mA 3-40V 1500mA 3-38V 1600mA 3-35V 1700mA 3-33V 1800mA 3-32V 1900mA 3-30V 2000mA 3-29V 2100mA	100-277VAC	ENEC Pending、CE、RoHS、REACH	192.5*62*24mm	RDM/NFC

PART 6

Wireless Dimmable LED Driver Series

Bluetooth, ZigBee, Wi-Fi, Wi-Fi & Bluetooth

(For LED strip, light bar, LED module, pane lightl, down light and other LED light)



Dimmable Driver


60W


100W-120W


150W-200W

Wireless decoder


IP20
With wire


IP20
With terminal

Wireless control lighting wiring diagram

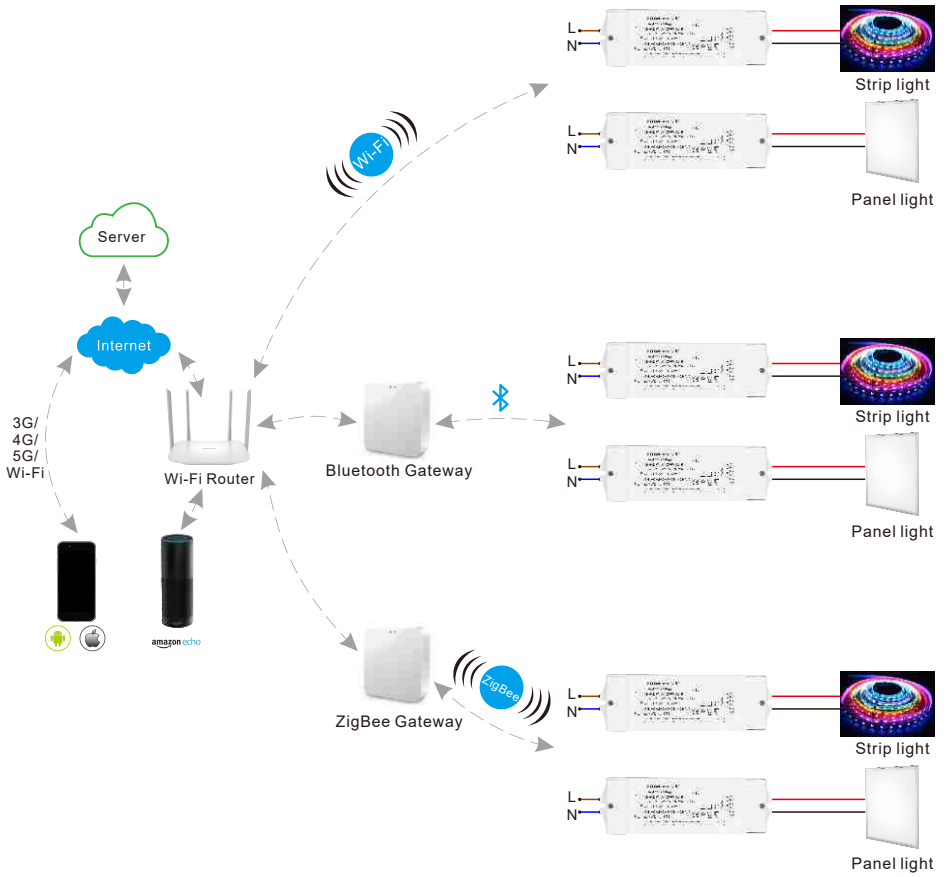

Wireless Dimmable LED Driver Series

Bluetooth, ZigBee, Wi-Fi , Wi-Fi & Bluetooth

Overview

Shengchang Bluetooth/ Zigbee/ Wi-Fi / Wi-Fi & Bluetooth wireless dimming power supply can be equipped with multi-brand wireless communication modules, such as TUYA, JIABITAI, WIZ and other wireless dimming modules.
The conventional wireless dimmable power supply is equipped with a TUYA wireless dimming module. The lighting can be flexibly controlled through the mobile app, such as setting scene, area control , timing dimming, music control, etc. When the power supply is combined with the Bluetooth/ Zigbee gateway, remote control can be realized, voice control lighting can also be realized through the smart speaker.
Shengchang has upgraded driver with high frequency exemption assessment to be 8KHz frequency.

Outstanding Performance

- BLE, ZigBee, Wi-Fi, Wi-Fi & BLE
- Continuous & Smooth & Stable
- Setting scene, area control, timing dimming, music control…
- Flicker-free 8K Hz
- Full dimming range: 0-100%
- 5 years warranty
- Dimming CCT RGB RGBW RGBCW

Different versions

KVB/KVZ/KVW/KVWB-xxxxx-xC-P



60W items:
Low-profile plastic shell for dry and damp location

KVB/KVZ/KVW/KVWB-xxxxx-xC-A



100W-200W items:
Compact aluminum shell for wet, dry and damp location

KVB/KVZ/KVW/KVWB-5AxC-W/T



Dimmable Decoder:
Low-profile plastic shell for dry and damp location

Perfect to use for LED fixtures

Perfect to use for LED tape/strip, modules, LED bar light, cabinet light, kitchen light and other LED fixtures.






KVB Series

Bluetooth Wireless Dimming Constant Voltage

Dimming CCT RGB RGBW RGBCW

KVB-12060-xC-y
x=1,2,3,4,5 CH — Different channels for choice
1CH: Dimming
2CH: CCT Dimming
3CH: RGB Dimming
4CH: RGBW Dimming
5CH: RGBCW Dimming
y=A, P (shell) — Different shells for choice

Power & Picture		Model	Output	Input	Mode	Certificate	Size	N.W	IP
60W (x=1, 2, 3, 4, 5 CH)	 V+ ADJ - +	KVB-12060-xC-P	11-13V, 5A	100-277VAC	BLE	ENEC Pending CE、RoHS、UL、REACH	192.5*62*24mm	0.5Kg	IP20 with terminals
		KVB-24060-xC-P	23-25V, 2.5A						
		KVB-48060-xC-P	46-50V, 1.25A						
100W (x=1, 2, 3, 4, 5 CH)		KVB-12100-xC-A	12V, 8.33A	100-277VAC	BLE	ENEC Pending CE、RoHS、UL、REACH	200*70*43mm	1.05Kg	IP66
		KVB-24100-xC-A	24V, 4.17A						
		KVB-48100-xC-A	48V, 2.08A						
120W (x=1, 2, 3, 4, 5 CH)		KVB-12120-xC-A	12V, 10A	100-277VAC	BLE	ENEC Pending CE、RoHS、UL、REACH	200*70*43mm	1.05Kg	IP66
		KVB-24120-xC-A	24V, 5A						
		KVB-48120-xC-A	48V, 2.5A						
150W (x=1, 2, 3, 4, 5 CH)		KVB-12150-xC-A	12V, 12.5A	110-277VAC	BLE	ENEC Pending、CE、RoHS、REACH	279*78*25.1mm	1.2Kg	IP66
		KVB-24150-xC-A	24V, 6.25A						
		KVB-48150-xC-A	48V, 3.13A						
200W (x=1, 2, 3, 4, 5 CH)		KVB-12200-xC-A	12V, 16.67A	110-277VAC	BLE	ENEC Pending、CE、RoHS、REACH	279*78*25.1mm	1.2Kg	IP66
		KVB-24200-xC-A	24V, 8.34A						
		KVB-48200-xC-A	48V, 4.17A						

Bluetooth Wireless decoder

Picture	Dim Way	Model	Output	Input	Size	Certificate	IP
	BLE	KVB-5AxC-W (x=1,2,3 CH)	12-48V, x*5A	12-48V	65*35*24mm	CE、RoHS	IP20 With wire
	BLE	KVB-5AxC-T (x=3,4,5 CH)	12-48V, x*5A	12-48V	102*44*26mm	CE、RoHS	IP20 With terminal

V+ ADJ - +

Note: **60W** drivers with slightly adjustable output voltage as below:
12V output voltage: 11-13V 24V output voltage: 23-25V 48V output voltage: 46-50V

KVZ Series

ZigBee Wireless Dimming

Constant Voltage

Dimming CCT RGB RGBW RGBCW

KVZ-12060-xC-y
- x=1,2,3,4,5 CH: Different channels for choice
  - 1CH: Dimming
  - 2CH: CCT Dimming
  - 3CH: RGB Dimming
  - 4CH: RGBW Dimming
  - 5CH: RGBCW Dimming
- y=A, P (shell): Different shells for choice

Power & Picture		Model	Output	Input	Mode	Certificate	Size	N.W	IP
60W (x=1, 2, 3, 4, 5 CH)	 V+ ADJ - +	KVZ-12060-xC-P	11-13V, 5A	100-277VAC	ZigBee	ENEC Pending CE、RoHS、UL、REACH	192.5*62*24mm	0.5Kg	IP20 with terminals
		KVZ-24060-xC-P	23-25V, 2.5A						
		KVZ-48060-xC-P	46-50V, 1.25A						
100W (x=1, 2, 3, 4, 5 CH)		KVZ-12100-xC-A	12V, 8.33A	100-277VAC	ZigBee	ENEC Pending CE、RoHS、UL、REACH	200*70*43mm	1.05Kg	IP66
		KVZ-24100-xC-A	24V, 4.17A						
		KVZ-48100-xC-A	48V, 2.08A						
120W (x=1, 2, 3, 4, 5 CH)		KVZ-12120-xC-A	12V, 10A	100-277VAC	ZigBee	ENEC Pending CE、RoHS、UL、REACH	200*70*43mm	1.05Kg	IP66
		KVZ-24120-xC-A	24V, 5A						
		KVZ-48120-xC-A	48V, 2.5A						
150W (x=1, 2, 3, 4, 5 CH)		KVZ-12150-xC-A	12V, 12.5A	110-277VAC	ZigBee	ENEC Pending、CE、RoHS、REACH	279*78*25.1mm	1.2Kg	IP66
		KVZ-24150-xC-A	24V, 6.25A						
		KVZ-48150-xC-A	48V, 3.13A						
200W (x=1, 2, 3, 4, 5 CH)		KVZ-12200-xC-A	12V, 16.67A	110-277VAC	ZigBee	ENEC Pending、CE、RoHS、REACH	279*78*25.1mm	1.2Kg	IP66
		KVZ-24200-xC-A	24V, 8.34A						
		KVZ-48200-xC-A	48V, 4.17A						

ZigBee Wireless decoder

Picture	Dim Way	Model	Output	Input	Size	Certificate	IP
	ZigBee	KVZ-5AxC-W (x=1,2,3 CH)	12-48V, x*5A	12-48V	65*35*24mm	CE、RoHS	IP20 With wire
	ZigBee	KVZ-5AxC-T (x=3,4,5 CH)	12-48V, x*5A	12-48V	102*44*26mm	CE、RoHS	IP20 With terminal

V+ ADJ - +

Note: **60W** drivers with slightly adjustable output voltage as below:
12V output voltage: 11-13V 24V output voltage: 23-25V 48V output voltage: 46-50V

KVW Series

Wi-Fi Wireless Dimming

Constant Voltage

Dimming CCT RGB RGBW RGBCW

KVW-12060-xC-y
- x=1,2,3,4,5 CH: Different channels for choice
  - 1CH: Dimming
  - 2CH: CCT Dimming
  - 3CH: RGB Dimming
  - 4CH: RGBW Dimming
  - 5CH: RGBCW Dimming
- y=A, P (shell): Different shells for choice

Power & Picture		Model	Output	Input	Mode	Certificate	Size	N.W	IP
60W (x=1, 2, 3, 4, 5 CH)	 V+ ADJ - +	KVW-12060-xC-P	11-13V, 5A	100-277VAC	Wi-Fi	ENEC Pending CE、RoHS、UL、REACH	192.5*62*24mm	0.5Kg	IP20 with terminals
		KVW-24060-xC-P	23-25V, 2.5A						
		KVW-48060-xC-P	46-50V, 1.25A						
100W (x=1, 2, 3, 4, 5 CH)		KVW-12100-xC-A	12V, 8.33A	100-277VAC	Wi-Fi	ENEC Pending CE、RoHS、UL、REACH	200*70*43mm	1.05Kg	IP66
		KVW-24100-xC-A	24V, 4.17A						
		KVW-48100-xC-A	48V, 2.08A						
120W (x=1, 2, 3, 4, 5 CH)		KVW-12120-xC-A	12V, 10A	100-277VAC	Wi-Fi	ENEC Pending CE、RoHS、UL、REACH	200*70*43mm	1.05Kg	IP66
		KVW-24120-xC-A	24V, 5A						
		KVW-48120-xC-A	48V, 2.5A						
150W (x=1, 2, 3, 4, 5 CH)		KVW-12150-xC-A	12V, 12.5A	110-277VAC	Wi-Fi	ENEC Pending、CE、RoHS、REACH	279*78*25.1mm	1.2Kg	IP66
		KVW-24150-xC-A	24V, 6.25A						
		KVW-48150-xC-A	48V, 3.13A						
200W (x=1, 2, 3, 4, 5 CH)		KVW-12200-xC-A	12V, 16.67A	110-277VAC	Wi-Fi	ENEC Pending、CE、RoHS、REACH	279*78*25.1mm	1.2Kg	IP66
		KVW-24200-xC-A	24V, 8.34A						
		KVW-48200-xC-A	48V, 4.17A						

Wi-Fi Wireless decoder

Picture	Dim Way	Model	Output	Input	Size	Certificate	IP
	Wi-Fi	KVW-5AxC-W (x=1,2,3 CH)	12-48V, x*5A	12-48V	65*35*24mm	CE、RoHS、REACH	IP20 With wire
	Wi-Fi	KVW-5AxC-T (x=3,4,5 CH)	12-48V, x*5A	12-48V	102*44*26mm	CE、RoHS、REACH	IP20 With terminal

V+ ADJ - +

Note: **60W** drivers with slightly adjustable output voltage as below:
12V output voltage: 11-13V 24V output voltage: 23-25V 48V output voltage: 46-50V

KVWB Series

Wi-Fi & Bluetooth Wireless Dimming

Constant Voltage Dimming CCT RGB RGBW RGBCW

KVWB-12060-xC-y
- x=1,2,3,4,5 CH — Different channels for choice
  - 1CH: Dimming
  - 2CH: CCT Dimming
  - 3CH: RGB Dimming
  - 4CH: RGBW Dimming
  - 5CH: RGBCW Dimming
- y=A, P (shell) — Different shells for choice

Power & Picture		Model	Output	Input	Mode	Certificate	Size	N.W	IP
60W (x=1, 2, 3, 4, 5 CH)	 V+ ADJ - +	KVWB-12060-xC-P	11-13V, 5A	100-277VAC	Wi-Fi & BLE	ENEC Pending CE、RoHS	192.5*62*24mm	0.5Kg	IP20 with terminals
		KVWB-24060-xC-P	23-25V, 2.5A						
		KVWB-48060-xC-P	46-50V, 1.25A						
100W (x=1, 2, 3, 4, 5 CH)		KVWB-12100-xC-A	12V, 8.33A	100-277VAC	Wi-Fi & BLE	ENEC Pending CE、RoHS	200*70*43mm	1.05Kg	IP66
		KVWB-24100-xC-A	24V, 4.17A						
		KVWB-48100-xC-A	48V, 2.08A						
120W (x=1, 2, 3, 4, 5 CH)		KVWB-12120-xC-A	12V, 10A	100-277VAC	Wi-Fi & BLE	ENEC Pending CE、RoHS	200*70*43mm	1.05Kg	IP66
		KVWB-24120-xC-A	24V, 5A						
		KVWB-48120-xC-A	48V, 2.5A						
150W (x=1, 2, 3, 4, 5 CH)		KVWB-12150-xC-A	12V, 12.5A	110-277VAC	Wi-Fi & BLE	ENEC Pending CE、RoHS	279*78*25.1mm	1.2Kg	IP66
		KVWB-24150-xC-A	24V, 6.25A						
		KVWB-48150-xC-A	48V, 3.13A						
200W (x=1, 2, 3, 4, 5 CH)		KVWB-12200-xC-A	12V, 16.67A	110-277VAC	Wi-Fi & BLE	ENEC Pending CE、RoHS	279*78*25.1mm	1.2Kg	IP66
		KVWB-24200-xC-A	24V, 8.34A						
		KVWB-48200-xC-A	48V, 4.17A						

Wi-Fi & Bluetooth Wireless Dimmable decoder

Picture	Dim Way	Model	Output	Input	Size	Certificate	IP
	Wi-Fi & BLE	KVWB-5AxC-W (x=1,2,3 CH)	12-48V, x*5A	12-48V	65*35*24mm	CE、RoHS	IP20 With wire
	Wi-Fi & BLE	KVWB-5AxC-T (x=3,4,5 CH)	12-48V, x*5A	12-48V	102*44*26mm	CE、RoHS	IP20 With terminal

V+ ADJ - +

Note: **60W** drivers with slightly adjustable output voltage as below:
12V output voltage: 11-13V 24V output voltage: 23-25V 48V output voltage: 46-50V

PART 7

Non-Dimmable LED Driver Series (High power factor)

(For LED strip, light bar, LED module, panel light, down light and other LED light)





30W-150W



30W-150W



30W-60W



75W-90W



60W-600W

Non-Dimmable LED Driver Series (High power factor)

Overview

SC POWER'S 100-277VAC Non-dimmable series driver, with high power factor up to 0.99, high efficiency , THD is less than 10% and no minimum load request . Suitable for LED bar light, cabinet light, kitchen light and other LED fixtures.

Outstanding Performance

- High power factor
  PF up to 0.99
- THD<10%
- Mutiple sheel for choice
- Reliable design
- 3-5 years warranty

Different versions

KV-xxxxx-ASH/AS



30W-90W items:
Low-profile endurable plastic shell (IP 20)
60W-600W items:
Compact aluminum shell for outdoor waterproof use (IP 66)

KV-xxxxx-ASS/ASL



ASS items:
Linear plastic shell (IP 20)
ASL items:
Linear aluminum shell for outdoor waterproof use (IP 66)

Perfect for LED fixtures

Perfect to use for LED tape/strip, modules, LED bar light, cabinet light, kitchen light and other LED fixtures.







Non-dimmable LED driver series Constant voltage

PF ≥ 0.95 Dimming

Power & Picture		Model	Output	Input	Certificate	Size	N.W	IP
30W	 V+ ADJ - +	KV-12030-ASH	12V, 2.5A	200-240 VAC	ENEC、CE、CB、RoHS、REACH	155*54*20mm	0.21kg	IP20 with terminal
		KV-24030-ASH	24V, 1.25A					
		KV-36030-ASH	36V, 0.83A					
		KV-48030-ASH	48V, 0.625A					
		KV-12030-ASS	12V, 2.5A	100-277 VAC	ENEC、CE、CB、RoHS、REACH	260*30*18.5mm	0.21kg	IP20 with terminal
		KV-24030-ASS	24V, 1.25A					
		KV-36030-ASS	36V, 0.83A					
		KV-48030-ASS	48V, 0.625A					
		KV-12030-ASL	12V, 2.5A		ENEC、CE、CB、RoHS、REACH	260*32*20mm	0.35kg	IP66
		KV-24030-ASL	24V, 1.25A					
		KV-36030-ASL	36V, 0.83A					
		KV-48030-ASL	48V, 0.625A					
36W		KV-12036-ASS	12V, 3A	100-277 VAC	ENEC、CE、CB、RoHS、REACH	260*30*18.5mm	0.2kg	IP20 with terminal
		KV-24036-ASS	24V, 1.5A					
		KV-36036-ASS	36V, 1A					
		KV-48036-ASS	48V, 0.75A					
		KV-12036-ASL	12V, 3A		ENEC、CE、CB、RoHS、REACH	260*32*20mm	0.35kg	IP66
		KV-24036-ASL	24V, 1.5A					
		KV-36036-ASL	36V, 1A					
		KV-48036-ASL	48V, 0.75A					
60W	 V+ ADJ - +	KV-12060-ASH	12V, 5A	200-240 VAC	ENEC、CE、CB、RoHS、REACH	178*61*24mm	0.35kg	IP20 with terminal
		KV-24060-ASH	24V, 2.5A					
		KV-36060-ASH	36V, 1.67A					
		KV-48060-ASH	48V, 1.25A					
		KV-12060-ASS	12V, 5A	100-277 VAC	ENEC、CE、CB、RoHS、REACH	300*30*18.5mm	0.3kg	IP20 with terminal
		KV-24060-ASS	24V, 2.5A					
		KV-36060-ASS	36V, 1.67A					
		KV-48060-ASS	48V, 1.25A					
		KV-12060-ASL	12V, 5A		ENEC、CE、CB、RoHS、REACH	300*32*20mm	0.45kg	IP66
		KV-24060-ASL	24V, 2.5A					
		KV-36060-ASL	36V, 1.67A					
		KV-48060-ASL	48V, 1.25A					

V+ ADJ - +
Note: 30W 60W 75W 90W drivers with slightly adjustable output voltage as below:
12V output voltage: 10-13V 24V output voltage: 21.5-25.5V 36V output voltage: 36-48V 48V output voltage: 48-50V

Non-dimmable LED driver series
Constant voltage

PF ≥ 0.95 Dimming

Power & Picture	Model	Output	Input	Certificate	Size	N.W	IP
60W 	KV-12060-AS	12V, 5A	100-265 VAC	ENEC Pending SAA、CE、RoHS、REACH	200*70*43mm	1.1kg	IP66
	KV-24060-AS	24V, 2.5A		CE、RoHS、REACH			
	KV-36060-AS	36V, 1.67A					
	KV-48060-AS	48V, 1.25A					
75W  V+ ADJ - +	KV-12075-ASH	12V, 6.25A	200-240 VAC	ENEC、CE、CB、RoHS、REACH	180*60*35mm	0.45kg	IP20 with terminal
	KV-24075-ASH	24V, 3.13A					
	KV-36075-ASH	12V, 2.08A		ENEC Pending CE、RoHS、REACH			
	KV-48075-ASH	24V, 1.56A					
80W 	KV-12080-ASH	12V, 6.67A	100-265 VAC	ENEC、CE、CB、SAA、CE、RoHS、REACH	200*70*43mm	1.1kg	IP66
	KV-24080-ASH	24V, 3.33A					
	KV-36080-ASH	12V, 2.22A		CE、RoHS、REACH			
	KV-48080-ASH	24V, 1.67A					
90W  V+ ADJ - +	KV-12090-ASH	12V, 7.5A	200-240 VAC	ENEC、CE、CB、RoHS、REACH	180*60*35mm	0.45kg	IP20 with terminal
	KV-24090-ASH	24V, 3.75A					
	KV-36090-ASH	12V, 2.5A		ENEC Pending CE、RoHS、REACH			
	KV-48090-ASH	24V, 1.88A					
100W 	KV-12100-ASH	12V, 8.33A	100-265 VAC	ENEC、CE、CB、CE、RoHS、REACH	230*70*43mm	1.05kg	IP66
	KV-24100-ASH	24V, 4.17A					
	KV-36100-ASH	36V, 2.78A					
	KV-48100-ASH	48V, 2.08A					
	KV-12100-ASS	12V, 8.33A	100-277 VAC	ENEC、CE、CB、RoHS、REACH	330*30*22mm	0.3kg	IP20 with terminal
	KV-24100-ASS	24V, 4.17A					
	KV-36100-ASS	36V, 2.78A					
	KV-48100-ASS	48V, 2.08A					
	KV-12100-ASL	12V, 8.33A		ENEC、CE、CB、RoHS、REACH	330*32*23mm	0.5kg	IP66
	KV-24100-ASL	24V, 4.17A					
	KV-36100-ASL	36V, 2.78A					
	KV-48100-ASL	48V, 2.08A					
120W 	KV-12120-ASH	12V, 10A	100-265 VAC	ENEC、CE、CB、CE、RoHS、REACH	230*70*43mm	1.05kg	IP66
	KV-24120-ASH	24V, 5A					
	KV-36120-ASH	36V, 3.33A					
	KV-48120-ASH	48V, 2.5A					

V+ ADJ - +

Note: 30W 60W 75W 90W drivers with slightly adjustable output voltage as below:
12V output voltage: 10-13V 24V output voltage: 21.5-25.5V 36V output voltage: 36-48V 48V output voltage: 48-50V

Non-dimmable LED driver series
- Constant voltage

PF ≥ 0.95 Dimming

Power & Picture	Model	Output	Input	Certificate	Size	N.W	IP
	KV-12150-ASH	12V, 12.5A	100-265 VAC	ENEC、CE、CB、CE、RoHS、REACH	256*80*53mm	1.5kg	IP66
	KV-24150-ASH	24V, 6.25A					
	KV-36150-ASH	36V, 4.17A					
	KV-48150-ASH	48V, 3.13A					
150W 	KV-12150-ASS	12V, 12.5A	100-277 VAC	ENEC、SAA、CE、CB、RoHS、REACH	368*30*22.5mm	0.4kg	IP20 with terminal
	KV-24150-ASS	24V, 6.25A					
	KV-36150-ASS	36V, 4.17A					
	KV-48150-ASS	48V, 3.13A					
	KV-12150-ASL	12V, 12.5A		ENEC、SAA、CE、CB、RoHS、REACH	330*32*23mm	0.55kg	IP66
	KV-24150-ASL	24V, 6.25A					
	KV-36150-ASL	36V, 4.17A					
	KV-48150-ASL	48V, 3.13A					
200W 	KV-12200-ASH	12V, 16.67A	110-265 VAC	ENEC、CE、CB、CE、RoHS、REACH	256*80*53mm	1.5kg	IP66
	KV-24200-ASH	24V, 8.33A					
	KV-36200-ASH	36V, 5.56A					
	KV-48200-ASH	48V, 4.17A					
300W 	KV-12300-ASH	12V, 25A	110-265 VAC	ENEC、CE、CB、CE、RoHS、REACH	276*78*47mm	1.7kg	IP66
	KV-24300-ASH	24V, 12.5A					
	KV-36300-ASH	36V, 8.33A					
	KV-48300-ASH	48V, 6.25A					
320W 	KV-12320-ASH	12V, 26.67A	110-265 VAC	ENEC、CE、CB、CE、RoHS、REACH	276*78*47mm	1.7kg	IP66
	KV-24320-ASH	24V, 13.34A					
	KV-36320-ASH	36V, 8.89A					
	KV-48320-ASH	48V, 6.67A					
360W 	KV-12360-ASH	12V, 30A	200-240 VAC	ENEC、CE、CB、CE、RoHS、REACH	276*78*47mm	1.7kg	IP66
	KV-24360-ASH	24V, 15A					
	KV-36360-ASH	36V, 10A					
	KV-48360-ASH	48V, 7.5A					
600W 	KV-12500-ASH	12V, 41.67A	200-240 VAC	ENEC REACH Pending CE、RoHS	322*78*47mm	2kg	IP66
	KV-24600-ASH	24V, 25A					
	KV-36600-ASH	36V, 16.67A					
	KV-48600-ASH	48V, 12.5A					



PART 8

LED Controller Series



LED CONTROLLER TRIAC DIMMER



Triac dimmer
TDP-250-T1



Triac dimmer
TDP-250-T2



Triac dimmer
TDR-300-T1
TDR-300-T2



0-10V dimmer
DIMP50-T1



0-10V dimmer
DIMP50-T2



0-10V dimmer
DIMR50-T1



DALI BUS
Power Supply
DA-BP-01



DALI dimmer
DAP-AC-G1



DALI dimmer
DAR-AC-G1



DALI dimmer
DAP-G1



DALI dimmer
DAP-G2



DALI dimmer
DAP-G3



DALI dimmer
DAP-G4



DALI dimmer
DAR-G1

Wiring diagram: Triac Dimmer

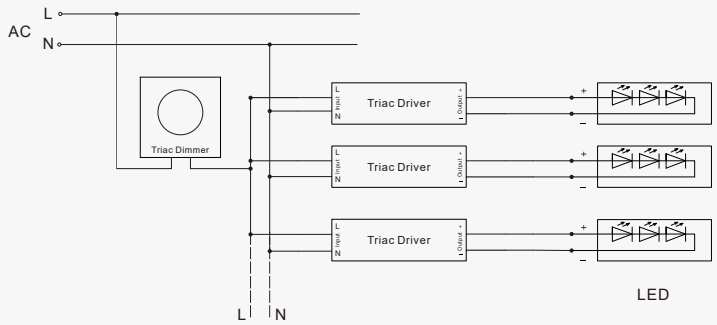

LED Controller: Triac Dimmer

Product	Model	Output	Input	Control Mode	Size	Phase-cut off Mode	N.W
	TDP250-T1	250W	220-240 VAC 50/60Hz	Triac/ Phase-cut	86*86*40mm	Trailing edge	0.17kg
	TDP250-T2						
	TDR300-T1	300W			86*86*50mm	Trailing edge	0.19kg
	TDR300-T2	300W				Leading edge	



LED CONTROLLER 0-10V DIMMER



LED CONTROLLER DALI DIMMER

Wiring diagram: 0-10V Dimmer

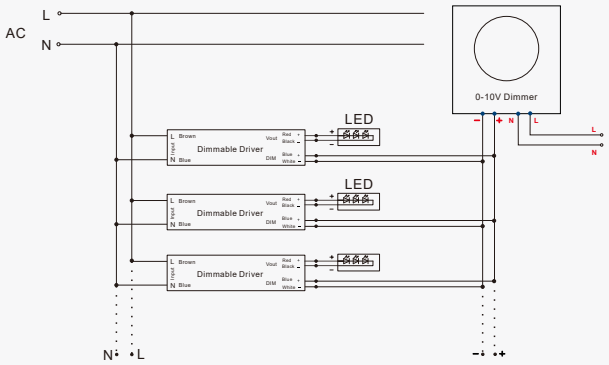

Wiring diagram: AC DALI Dimmer

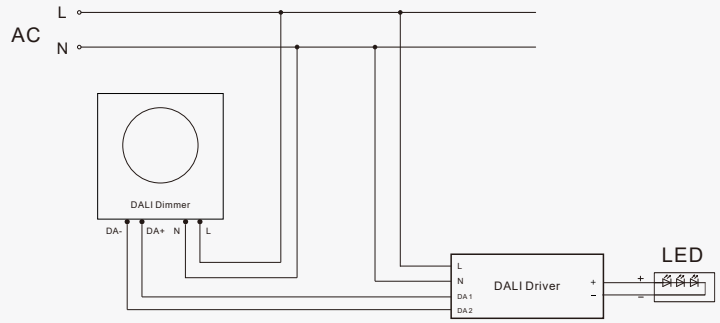

LED Controller: 0-10V Dimmer

Product	Model	Output	Input	Control Mode	Size	N.W
	DIMP50-T1	0-10V, 50mA	100-265 VAC	0-10V	86*86*40mm	0.17kg
	DIMP50-T2	0-10V, 50mA				
	DIMR50-T1	0-10V, 50mA			86*86*50mm	0.19kg

LED Controller: AC DALI Dimmer

Product	Model	Power	Input	Output	Control Mode	Size	N.W
	DAP-AC-G1	0.8W	100-265VAC	16V(±5%) 50mA	Dimming, broadcast	86*86*40mm	0.7kg
	DAR-AC-G1	0.95W	100-265VAC	16V(±5%) 65mA	Dimming, broadcast	86*86*50mm	0.19kg



Wiring diagram: DALI Dimmer

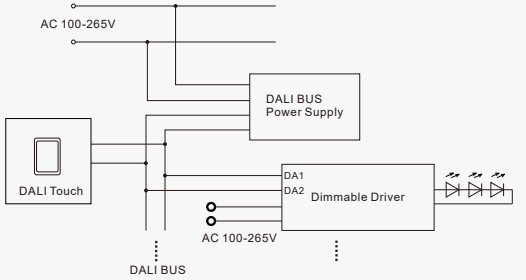

LED Controller: DALI Dimmer

Product	Model	Output	Input	Control Mode	Size	N.W
	DAP-G1	DALI Signal	DALI Power	Dimming,1CH	86*86*40mm	0.17kg
	DAP-G2			Dimming,2CH		
	DAP-G3			Dimming,3CH		
	DAP-G4			Dimming,4CH		
	DAR-G1			Dimming,1CH	86*86*50mm	0.19kg

DALI BUS Power Supply

Product	Model	Power	Input	Output	Rated Current	Size	N.W
	DA-BP-01	3W max	100-265VAC 50/60Hz	15VDC	200mA	87.4*36.4*60mm	115g ±10g